Introduction to Robotics

Lecture 8: Forward Kinematics

Forward kinematics of open chains

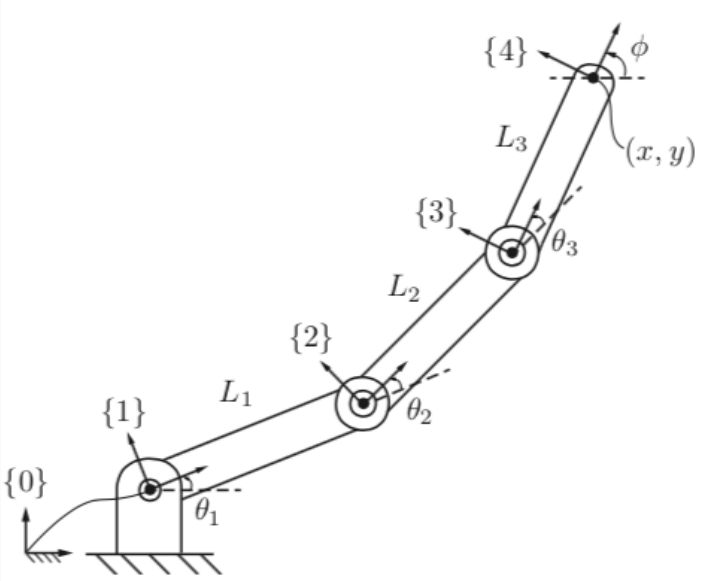

- The *forward kinematics* of a robot refers to the calculation of the position and orientation of its effector frame from its joint coordinates.
- Here, simple trigonometry yields

$$x = L_1 \cos\theta_1 + L_2 \cos(\theta_1 + \theta_2) + L_3 \cos(\theta_1 + \theta_2 + \theta_3)$$
$$y = L_1 \sin\theta_1 + L_2 \sin(\theta_1 + \theta_2) + L_3 \sin(\theta_1 + \theta_2 + \theta_3)$$

Forward kinematics

- For more complex 3D mechanisms, a direct analysis as done in previous slide is too onerous.
- We describe two systematic, principle ways to perform forward kinematics: Product of Exponentials (PoE) and *Denavit-Hartenberg* (next lecture).
- What we can do using previous lectures: attaching frames 1,2,3,4 to the three links and end-effector respectively, and denoting by 0 the reference frame, we need T_{04}, which we can obtain as

$$T_{04} = T_{01}\, T_{12}\, T_{23}\, T_{34},$$

and $T_{i(i+1)}$ are easy to derive.

Forward kinematics: using homogeneous transformations

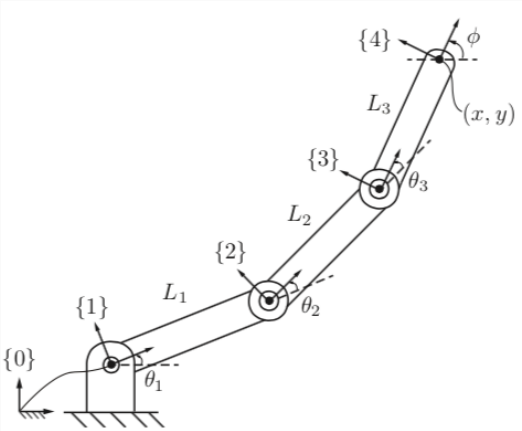

$$T_{01} = \begin{bmatrix} \cos\theta_1 & -\sin\theta_1 & 0 & 0 \\ \sin\theta_1 & \cos\theta_1 & 0 & 0 \\ 0 & 0 & 1 & 0 \\ 0 & 0 & 0 & 1 \end{bmatrix}, \; T_{12} = \begin{bmatrix} \cos\theta_2 & -\sin\theta_2 & 0 & L_1 \\ \sin\theta_2 & \cos\theta_2 & 0 & 0 \\ 0 & 0 & 1 & 0 \\ 0 & 0 & 0 & 1 \end{bmatrix}$$

$$T_{23} = \begin{bmatrix} \cos\theta_3 & -\sin\theta_3 & 0 & L_2 \\ \sin\theta_3 & \cos\theta_3 & 0 & 0 \\ 0 & 0 & 1 & 0 \\ 0 & 0 & 0 & 1 \end{bmatrix}, \; T_{34} = \begin{bmatrix} 1 & 0 & 0 & L_3 \\ 0 & 1 & 0 & 0 \\ 0 & 0 & 1 & 0 \\ 0 & 0 & 0 & 1 \end{bmatrix}$$

Forward kinematics: using screw motions

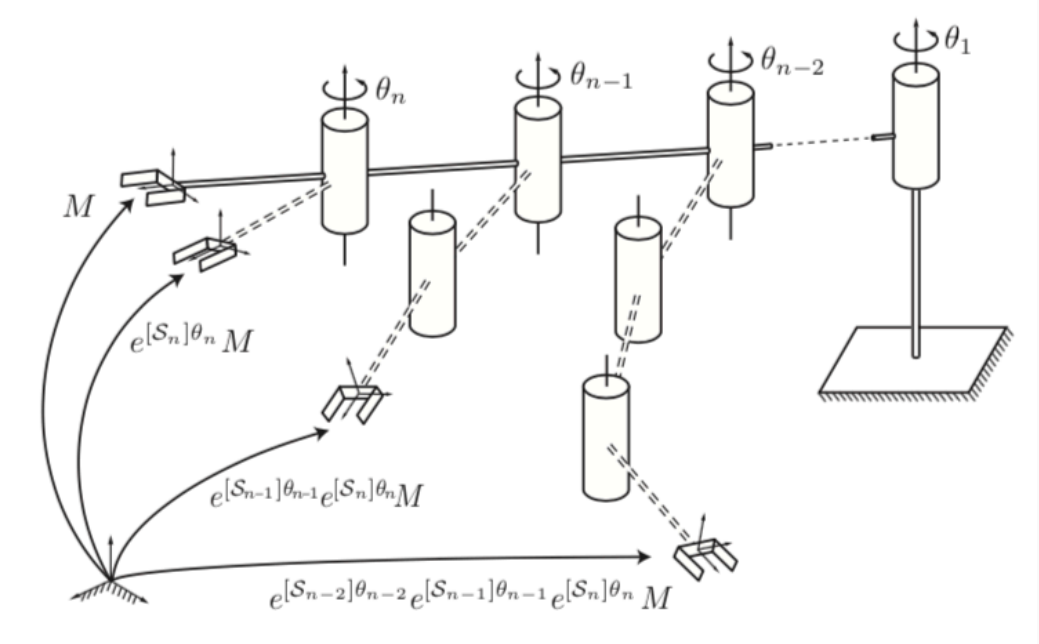

- Assume the arm is in "resting position":
  $M := T(I, (L_1 + L_2 + L_3, 0, 0)^\top)$.
- From this resting position, what motions are possible?
- Revolute joints allow screw motions with zero pitch.
- Assume $\theta_1 = \theta_2 = 0$. Describe the screw motion of joint 3 by its twist in frame 0: $\mathcal{S}_3 = [\omega_3, v_3]$.

Forward kinematics: using screw motions

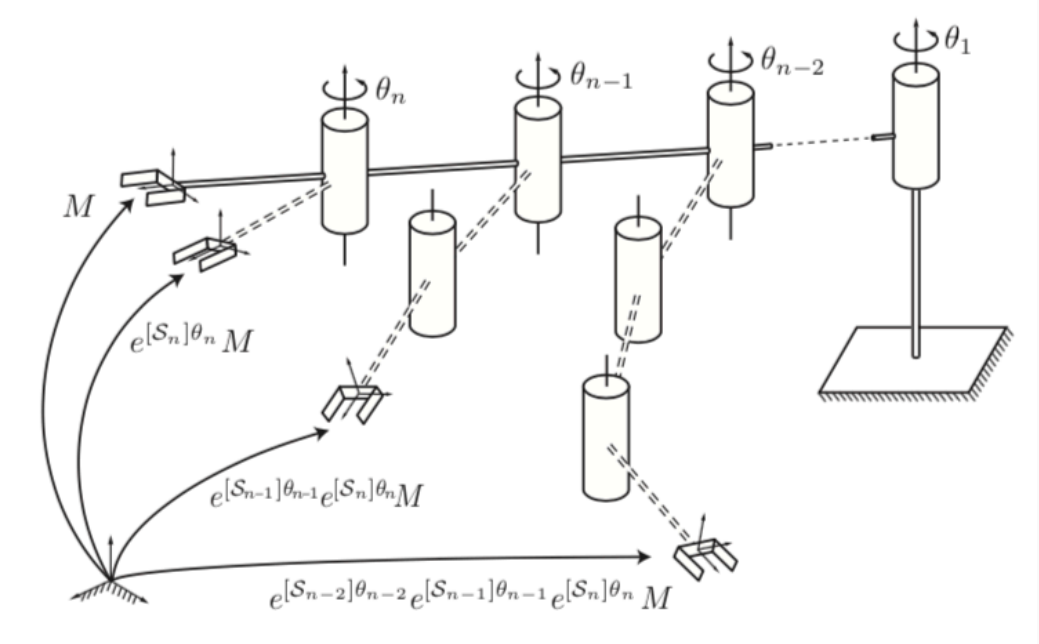

- How to obtain ω_3, v_3?
- Revolute joint: rotation around axis perpendicular to motion and ω is normalized vector in this direction $\longrightarrow \omega_3 = (0, 0, 1)^\top$.
- To find v_3, consider a rigid body attached to the joint and following the joint's motion: v_3 is the velocity of the point at the origin of frame 0. This speed is $\omega \times (-L_1 - L_2, 0, 0)^\top$.

Forward kinematics: using screw motions

- When only θ_3 is allowed to move, we have

$$T_{04} = e^{[\mathcal{S}_3]\theta_3} M,$$

where, by definition,

$$[\mathcal{S}_3] = \begin{bmatrix} 0 & -\omega_3 & \omega_2 & v_1 \\ \omega_3 & 0 & -\omega_1 & v_2 \\ -\omega_2 & \omega_1 & 0 & v_3 \\ 0 & 0 & 0 & 0 \end{bmatrix}.$$

- Thus here, $[\mathcal{S}_3] = \begin{bmatrix} 0 & -1 & 0 & 0 \\ 1 & 0 & 0 & -(L_1 + L_2) \\ 0 & 0 & 0 & 0 \\ 0 & 0 & 0 & 0 \end{bmatrix}$

Forward kinematics: product of exponentials

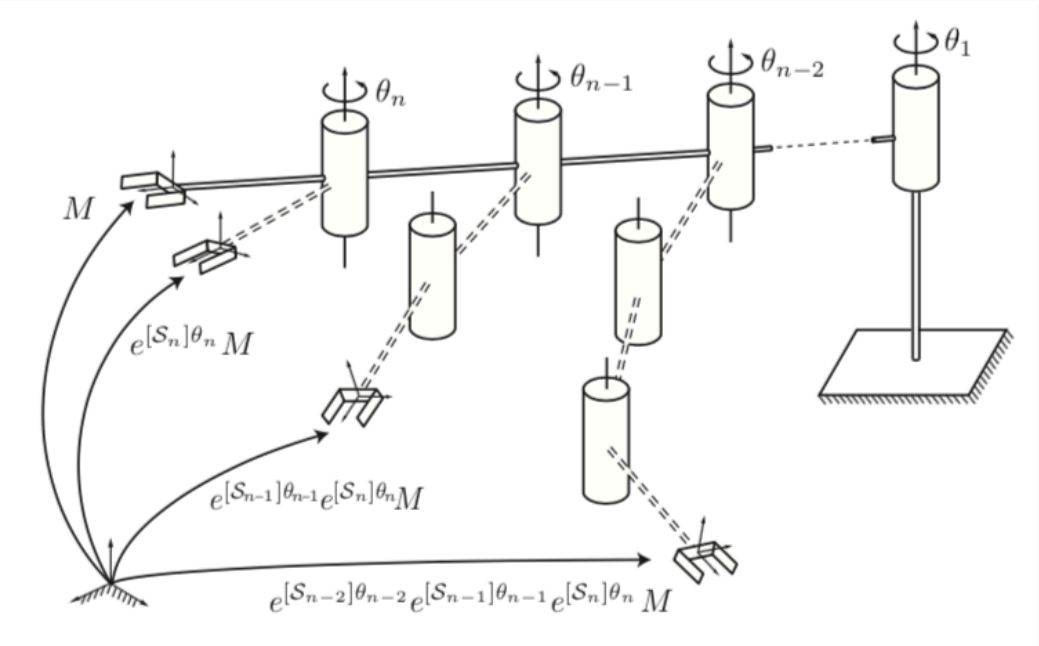

- We now repeat the procedure: assume θ_1 fixed at zero, θ_3 fixed at an arbitrary value, and move θ_2. The corresponding twist is

$$\mathcal{S}_2 = (\omega_2 = (0, 0, 1)^\top, (0, -L_1, 0))^\top.$$

Forward kinematics: product of exponentials

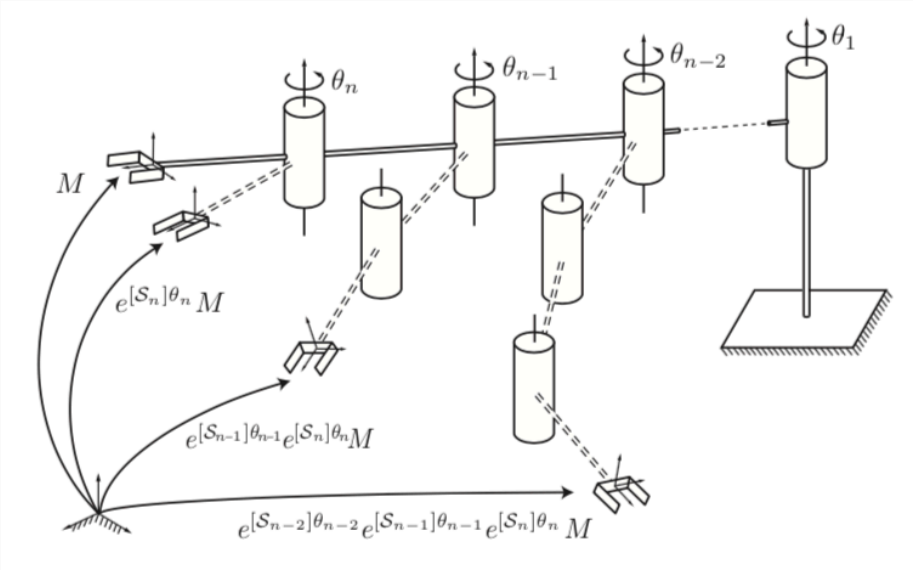

- Thus $[\mathcal{S}_2] = \begin{bmatrix} 0 & -1 & 0 & 0 \\ 1 & 0 & 0 & -L_1 \\ 0 & 0 & 0 & 0 \\ 0 & 0 & 0 & 1 \end{bmatrix}$
- Now rotation about joint 2 can be viewed as applying a screw motion to the rigid body (link 1+ link 2), thus

$$T_{04} = e^{[\mathcal{S}_2]\theta_2} e^{[\mathcal{S}_3]\theta_3} M.$$

Forward kinematics: product of exponentials

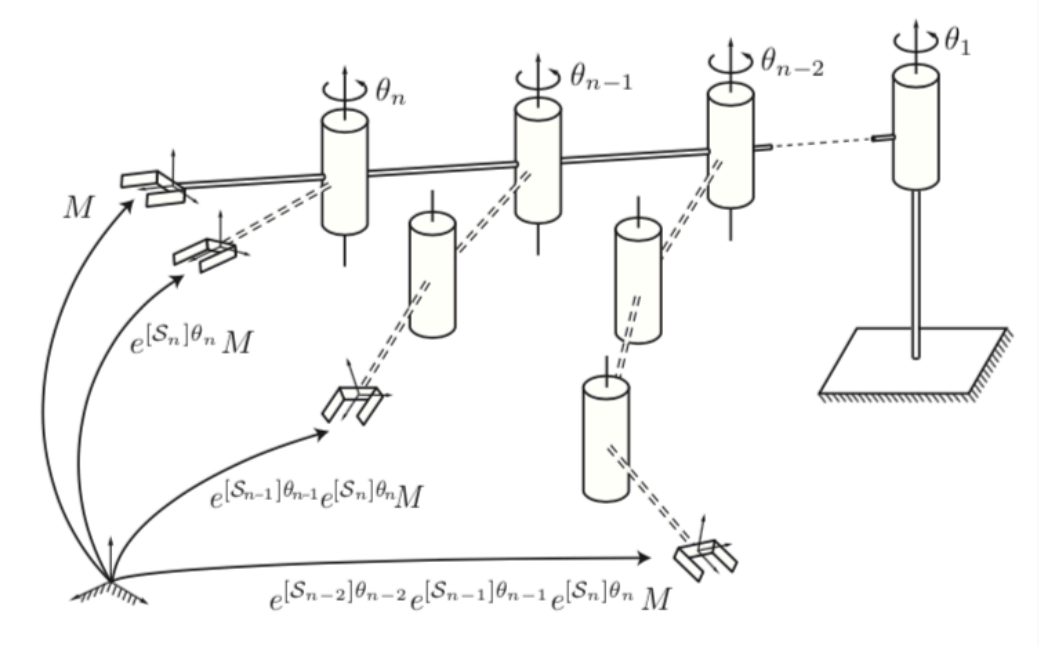

- Finally, $\mathcal{S}_1 = ((0,0,1)^\top, (0,0,0)^\top)$ and

$$T_{04} = e^{[\mathcal{S}_1]\theta_1} e^{[\mathcal{S}_2]\theta_2} e^{[\mathcal{S}_3]\theta_3} M.$$

Product of exponentials: example

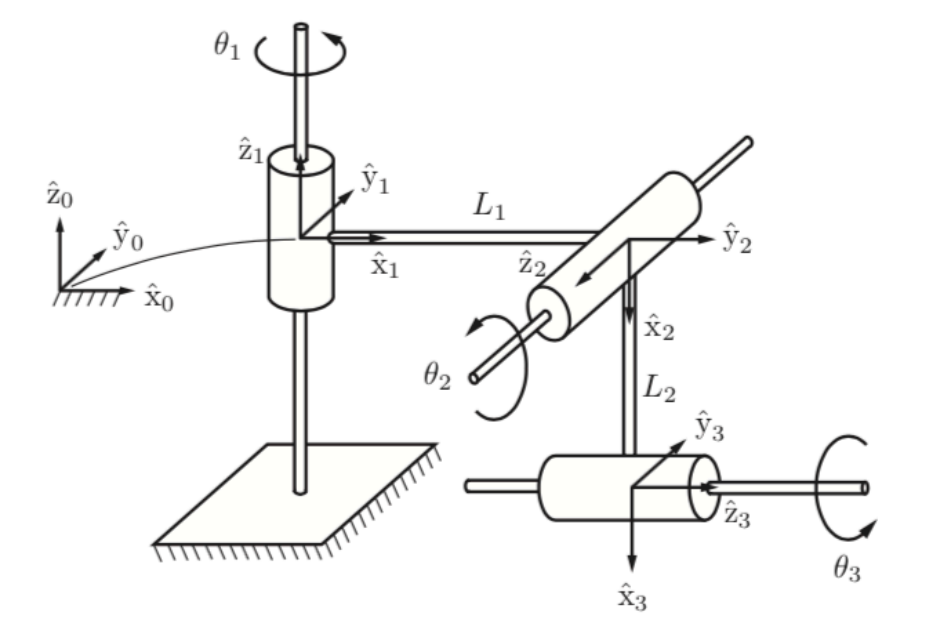

- 3R open chain, with non-collinear rotation axes.
- Note: $\hat{z}_i$ aligned with rotation axis, $\hat{x}_i$ points to next joint.
- Forward kinematics as the form

$$T(\theta) = e^{[\mathcal{S}_1]\theta_1} e^{[\mathcal{S}_2]\theta_2} e^{[\mathcal{S}_3]\theta_3} M.$$

We need to find M and the $\mathcal{S}_i$'s.

Product of exponentials: example

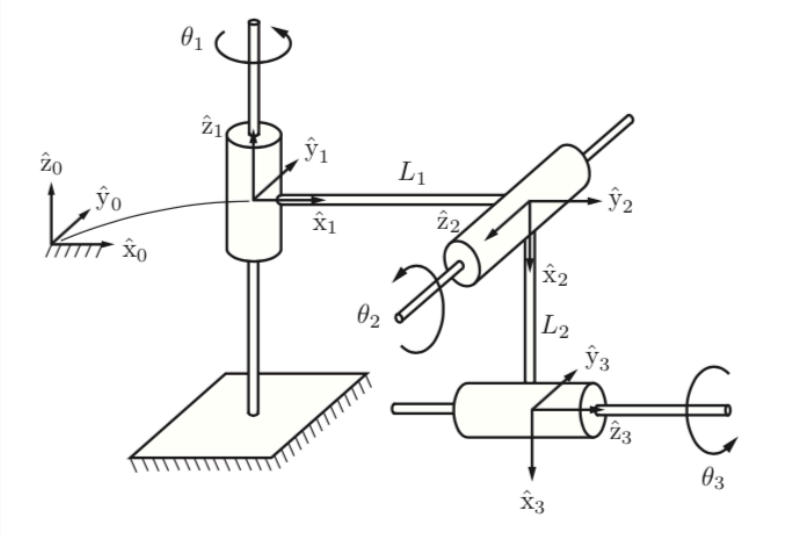

- M is the configuration of the end-effector fixed frame (frame 3) when *all* joint variables are zero.
- We obtain

$$M = \begin{bmatrix} 0 & 0 & 1 & L_1 \\ 0 & 1 & 0 & 0 \\ -1 & 0 & 0 & -L_2 \\ 0 & 0 & 0 & 1 \end{bmatrix}.$$

Product of exponentials: example

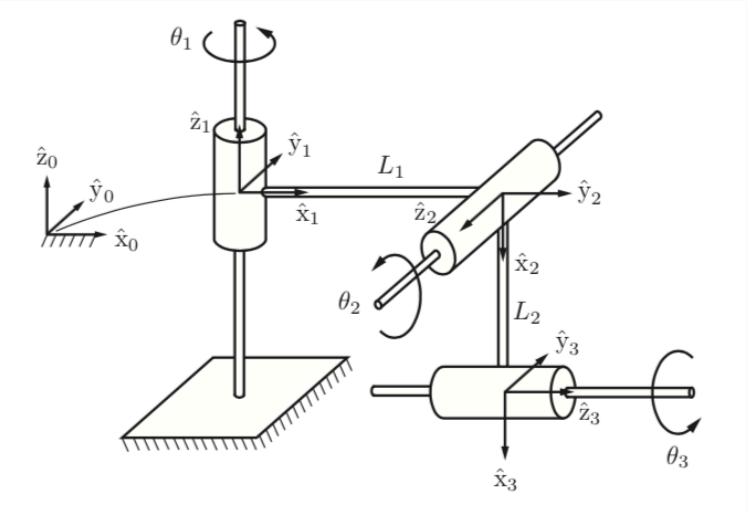

- The screw axis for joint 1 in frame 0 is $\mathcal{S}_1 = (\omega_1, v_1)$ with $\omega_1 = (0, 0, 1)^\top$ and $v_1 = (0, 0, 0)^\top$.
- The screw axis for joint 2 in frame 0 is $\mathcal{S}_2 = (\omega_2, v_2)$ with $\omega_2 = (0, -1, 0)^\top$ and $v_2 = (0, 0, -L_1)^\top$.
- To obtain v_2, set q to be the vector joining origin of reference frame to center of joint, here $q = (L_1, 0, 0)^\top$ and then $v_2 = \omega_2 \times (-q)$.
- Finally, $\mathcal{S}_3 = (\omega_3, v_3)$ with $\omega_3 = (1, 0, 0)^\top$ and $v_3 = \omega_3 \times (-(L_1, 0, -L_2)^\top) = (0, -L_2, 0)$

Product of exponentials: example: RRPRRR open chain

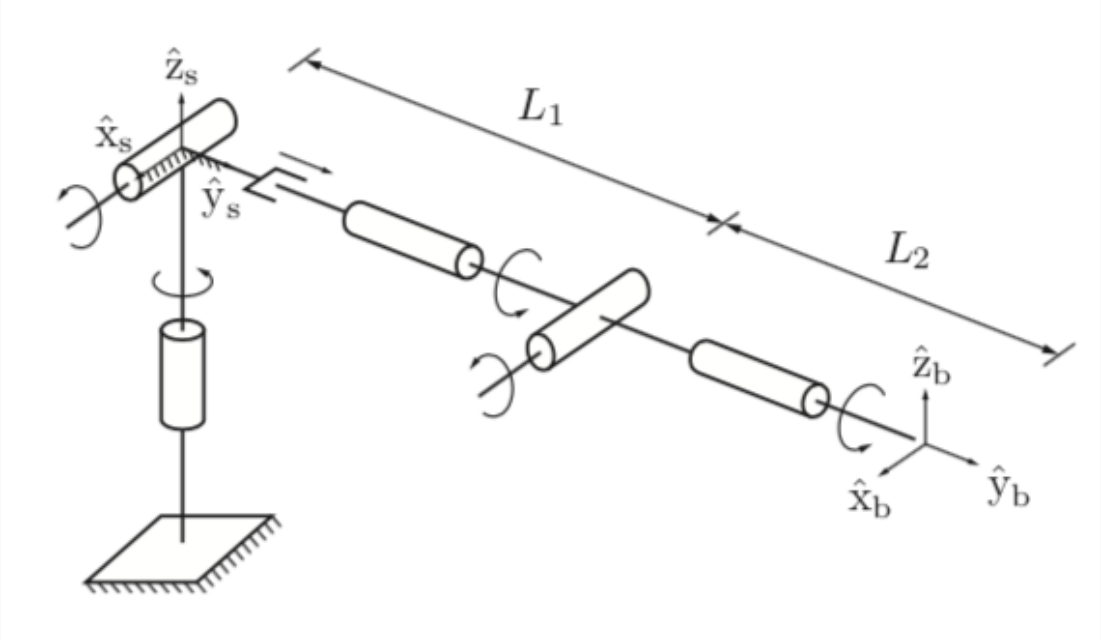

Forward kinematics is described by

$$M = \begin{bmatrix} 1 & 0 & 0 & 0 \\ 0 & 1 & 0 & L_1 + L_2 \\ 0 & 0 & 1 & 0 \\ 0 & 0 & 0 & 1 \end{bmatrix}$$

i	ω_i	v_i
1	$(0,0,1)$	$(0,0,0)$
2	$(1,0,0)$	$(0,0,0)$
3	$(0,0,0)$	$(0,1,0)$
4	$(0,1,0)$	$(0,0,0)$
5	$(1,0,0)$	$(0,0,-L_1)$
6	$(0,1,0)$	$(0,0,0)$