lecture 10
velocity kinematics II

Prof. DC

February 28, 2023

Modern Robotics Ch. 5.1-5.3

Admin

- HW5 due on Friday (3/3)
- First guest lecture will be on Thursday (3/9)
  - Attendance is required
  - You will submit a short reflection after
- This week’s homework party is in 1232 CSL Studio

Extra Credit Opportunity

- Submit an informational/tutorial video for some course topic
- The video should be ~5 minutes in length. You will be graded on the following:
  – How challenging is the topic?
  – Did you provide an interesting motivating example?
  – How well did you explain the topic?
  – Did you provide an informative worked example?
  – How effective are the visualizations used?
- Check out examples on the website, and/or 3Blue1Brown or the Kahn Academy on YouTube

Refresher on Twists

T_{sb}

- What is a **twist?**
  - Spatial velocity: $\mathcal{V}_s = \begin{bmatrix} \omega_s \\ v_s \end{bmatrix}, [\mathcal{V}_s] = \begin{bmatrix} [\omega_s] & v_s \\ 0 & 0 \end{bmatrix} = \dot{T}T^{-1}$
- What is the **adjoint map?**
  - Given $T = (R, p)$, $[\mathrm{Ad}_T] = \begin{bmatrix} R & 0 \\ [p]R & R \end{bmatrix} \in \mathbb{R}^{6\times 6}$
  - $\mathcal{V}' = [Ad_T]\mathcal{V} = Ad_T(\mathcal{V})$
  - $[\mathcal{V}'] = T[\mathcal{V}]T^{-1}$

$[Ad_{T(R,p)}]$

$\downarrow \begin{bmatrix} R & p \\ 0 & 1 \end{bmatrix}$

$T_{01}\, T_{12}\, T_{23} = T_{03}$

Velocity Kinematics

Forward Kinematics

Calculate the position of the end-effector of an open chain given joint angles

$$x(t) = f(\theta(t))$$

Velocity Kinematics

Calculate the velocity (twist!) of the end-effector frame

$$\frac{d}{dt}x(t) = \underbrace{\frac{\partial f}{\partial \theta}(\theta)}_{J(\theta)} \cdot \dot{\theta} = J(\theta) \cdot \dot{\theta}$$

Jacobian and Manipulability

- Suppose joint limits are $\dot{\theta}_1^2 + \dot{\theta}_2^2 \leq 1$
- The ellipsoid obtained by mapping through the Jacobian is called **the manipulability ellipsoid**

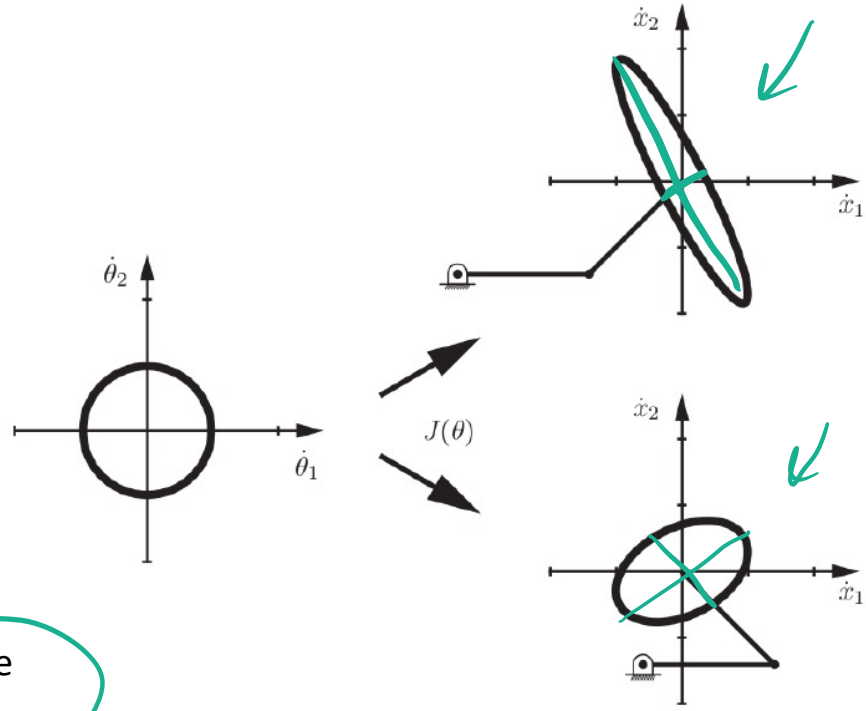

Configurations for which the end-effector cannot move in one or more directions instantaneously is a kinematic singularity

$J(\theta)$ is not full rank, <6 linearly independent columns

Computing the Jacobian

- Recall forward kinematics:

$$T(\theta) = \underbrace{e^{[\mathcal{S}_1]\theta_1} e^{[\mathcal{S}_2]\theta_2} \cdots e^{[\mathcal{S}_n]\theta_n} M}$$

- Take the derivative:

$$\dot{T}(\theta) = \frac{d}{dt}\left(e^{[\mathcal{S}_1]\theta_1}\right) e^{[\mathcal{S}_2]\theta_2} \cdots e^{[\mathcal{S}_n]\theta_n} M + \cdots + e^{[\mathcal{S}_1]\theta_1} e^{[\mathcal{S}_2]\theta_2} \cdots \frac{d}{dt}\left(e^{[\mathcal{S}_n]\theta_n}\right) M$$

$$= [\mathcal{S}_1]\, \dot{\theta}_1 e^{[\mathcal{S}_1]\theta_1} \cdots e^{[\mathcal{S}_n]\theta_n} M + \cdots + e^{[\mathcal{S}_1]\theta_1} \cdots [\mathcal{S}_n]\, \dot{\theta}_n e^{[\mathcal{S}_n]\theta_n} M$$

- Take the inverse:

$$T^{-1}(\theta) = M^{-1} e^{-[\mathcal{S}_n]\theta_n} \cdots e^{-[\mathcal{S}_1]\theta_1}$$

- Recall: $[\mathcal{V}_s] = \dot{T}\, T^{-1}$

$$\dot{T}T^{-1} = [\mathcal{S}_1]\dot{\theta}_1 + e^{[\mathcal{S}_1]\theta_1}[\mathcal{S}_2]e^{-[\mathcal{S}_1]\theta_1}\dot{\theta}_2 + e^{[\mathcal{S}_1]\theta_1} e^{[\mathcal{S}_2]\theta_2}[\mathcal{S}_3]e^{-[\mathcal{S}_2]\theta_2} e^{-[\mathcal{S}_1]\theta_1}\dot{\theta}_3 + \cdots$$

$J(\theta) \cdot \dot{\theta}$

Computing the Jacobian (2)

- Expressed via Adjoint:

$$\mathcal{V}_s = \underbrace{\mathcal{S}_1}_{J_{s1}}\dot{\theta}_1 + \underbrace{Ad_{e^{[\mathcal{S}_1]\theta_1}}(\mathcal{S}_2)}_{J_{s2}}\dot{\theta}_2 + \underbrace{Ad_{e^{[\mathcal{S}_1]\theta_1}e^{[\mathcal{S}_2]\theta_2}}(\mathcal{S}_3)}_{J_{s3}}\dot{\theta}_3 + \cdots$$

- Gives our Space Jacobian: $\mathcal{V}_s = J_s(\theta)\dot{\theta}$, $J_s(\theta) = [J_{s1}\ J_{s2} \cdots J_{sn}]$

we have: $J_{s1} = S_1$, $J_{si} = Ad_{e^{[S_1]\theta_1} \cdots e^{[S_{i-1}]\theta_{i-1}}}(S_i)$

- **<u>Intuition:</u>** If T_iM is the configuration when you set joints $\theta_1, \ldots, \theta_i$ and leave remaining joints at 0, then J_{si} is the screw vector at joint i, for an arbitrary θ

Visualizing the Jacobian

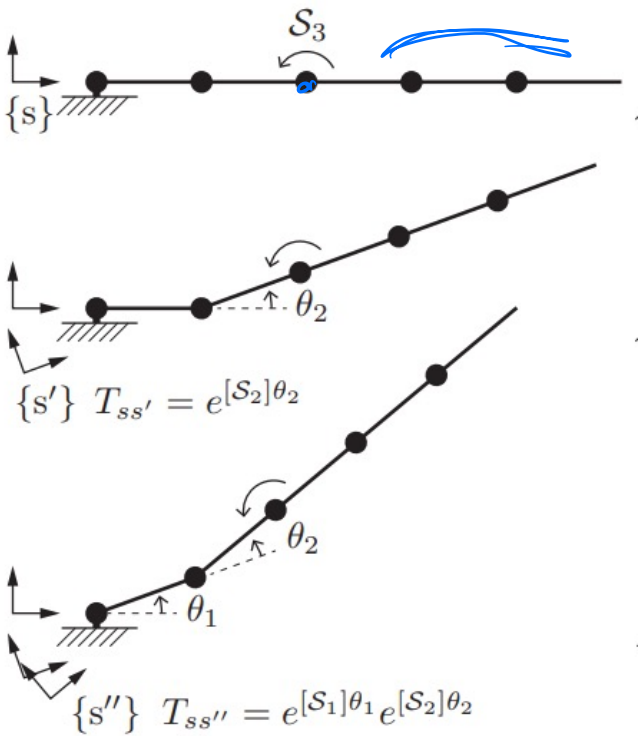

- By inspection, let's find J_{s3}
- Ignore joints $\theta_3, \theta_4, \theta_5$, as they do not displace axis 3 relative to {s}
- If $\theta_1 = 0$ and θ_2 is arbitrary, then $T_{ss'} = e^{[\mathcal{S}_2]\theta_2}$
- If θ_1 is arbitrary, then $T_{ss''} = e^{[\mathcal{S}_1]\theta_1} e^{[\mathcal{S}_2]\theta_2}$
- $J_{s3} = \left[Ad_{T_{ss''}}\right]\mathcal{S}_3 = \left[Ad_{e^{[\mathcal{S}_1]\theta_1} e^{[\mathcal{S}_2]\theta_2}}\right]\mathcal{S}_3$

Methods for Computing the Jacobian

By Inspection

$J_{si} = (\omega_{si}, v_{si})$ where $Ad_{T_{i-1}}$ is implicit

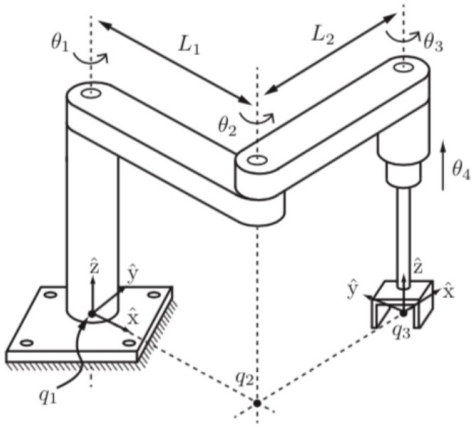

By Definition

The **space Jacobian** $J_s(\theta) \in \mathbb{R}^{6\times n}$ relates the joint rate vector $\dot{\theta} \in \mathbb{R}^n$ to the spatial twist $\mathcal{V}_s$ via

$$\mathcal{V}_s = J_s(\theta)\dot{\theta}. \tag{5.10}$$

The ith column of $J_s(\theta)$ is

$$J_{si}(\theta) = \underline{\mathrm{Ad}_{e^{[\mathcal{S}_1]\theta_1}\cdots e^{[\mathcal{S}_{i-1}]\theta_{i-1}}}}(\mathcal{S}_i), \tag{5.11}$$

for $i = 2, \ldots, n$, with the first column $J_{s1} = \mathcal{S}_1$.

Example 1

① $J_{s1} = S_1$, $\omega_{s1} = [0, 0, 1]^T$, $v_{s1} = [0, 0, 0]^T$

② $\omega_{s2} = [0, 0, 1]^T$, $q_2 = [L_1 \cos\theta_1, L_1 \sin\theta_1, 0]^T$

$v_{s2} = -\omega_{s2} \times q_2 = [L_1 \sin\theta_1, -L_1 \cos\theta_1, 0]^T$

$J_{si} = (\omega_{si}, v_{si})$

$[Ad_{T_{i-1}}]$ implicit w/ displacement of q_i

③ $\omega_{s3} = [0, 0, 1]^T$

$q_3 = [L_1 \cos\theta_1 + L_2 \cos(\theta_1 + \theta_2), L_1 \sin\theta_1 + L_2 \sin(\theta_1 + \theta_2), 0]^T$

④ $\omega_{s4} = [0, 0, 0]^T$, $v_{s4} = [0, 0, 1]^T$

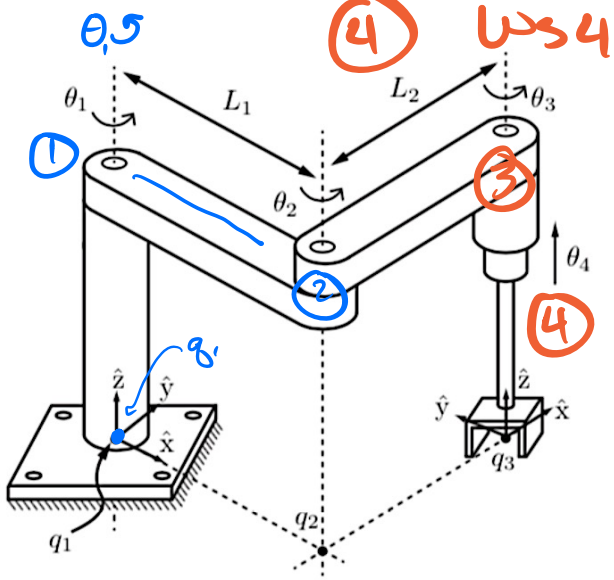

$$J_s(\theta) = \begin{bmatrix} 0 & 0 & 0 & 0 \\ 0 & 0 & 0 & 0 \\ 1 & 1 & 1 & 0 \\ 0 & L_1 s_1 & L_1 s_1 + L_2 s_{12} & 0 \\ 0 & -L_1 c_1 & -L_1 c_1 - L_2 c_{12} & 0 \\ 0 & 0 & 0 & 1 \end{bmatrix}$$

Example 2

what is $\mathcal{S}_1$?

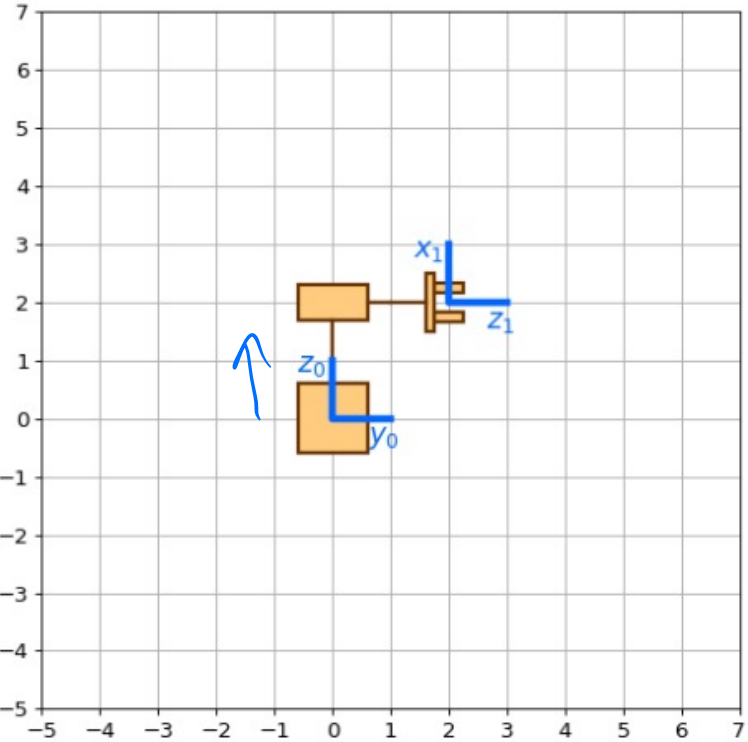

$$\omega_{s1} = \begin{bmatrix} 0 \\ 1 \\ 0 \end{bmatrix}, \quad q_{s1} = \begin{bmatrix} 0 \\ 0 \\ 2 \end{bmatrix}$$

$$v_{s1} = -\omega_{s1} \times q_{s1} = \begin{bmatrix} -2 \\ 0 \\ 0 \end{bmatrix}$$

$$J_{s1} = \mathcal{S}_1$$

$$\nu = J_{s1} \cdot \dot{\theta}$$

Example 3

① $J_{s1} = S_1 = \begin{bmatrix} 0 \\ 0 \\ 0 \\ 0 \\ 0 \\ -1 \end{bmatrix}$

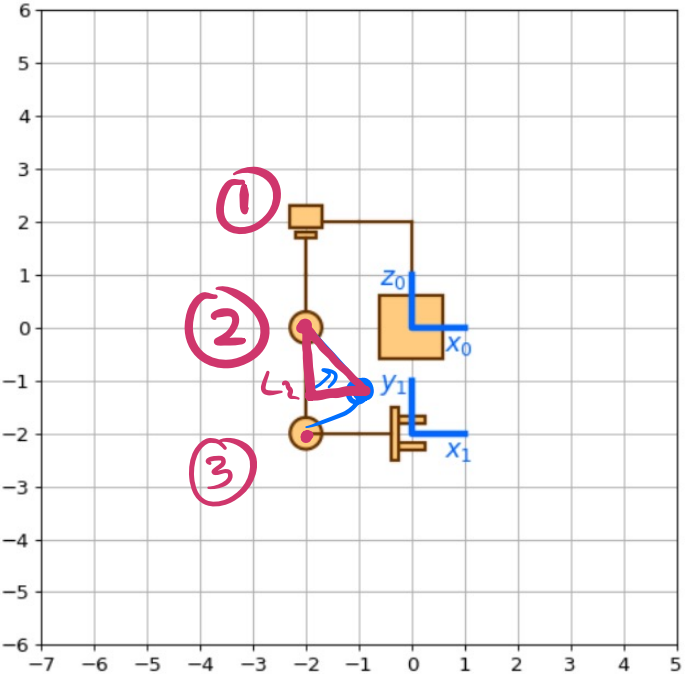

② $\omega_{s2} = [0, -1, 0]^T$

$q_2 = [-2, 0, -\theta_1]^T$

$v_{s2} = [-\theta_1, 0, 2]^T$

$J_{s2} = \begin{bmatrix} 0 \\ -1 \\ 0 \\ -\theta_1 \\ 0 \\ 2 \end{bmatrix}$

③ $\omega_{s3} = [0, -1, 0]^T$

$q_3 = \begin{bmatrix} -2 + 2\sin\theta_2 \\ 0 \\ -\theta_1 - 2\cos\theta_2 \end{bmatrix}$

$v_{s3} = \begin{bmatrix} -\theta_1 - 2\cos\theta_2 \\ 0 \\ 2 - 2\sin\theta_2 \end{bmatrix}$

$J_{s3} = \begin{bmatrix} 0 \\ -1 \\ 0 \\ v_{s3} \end{bmatrix}$

Example 4

④ $\omega_{s4} = [-1, 0, 0]^T$, $q_{s4} = [-2, 6, 0]^T$

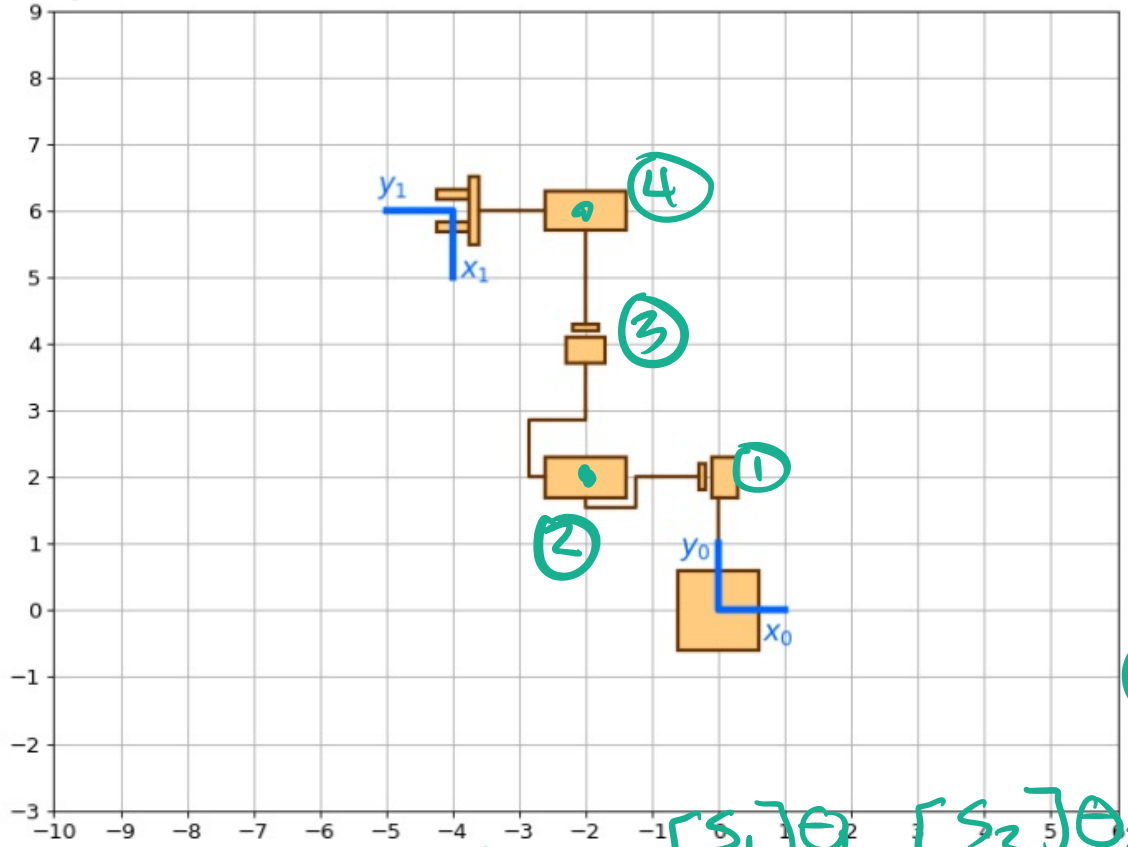

The **space Jacobian** $J_s(\theta) \in \mathbb{R}^{6\times n}$ relates the joint rate vector $\dot{\theta} \in \mathbb{R}^n$ to the spatial twist $\mathcal{V}_s$ via

$$\mathcal{V}_s = J_s(\theta)\dot{\theta}. \tag{5.10}$$

The ith column of $J_s(\theta)$ is

$$J_{si}(\theta) = \mathrm{Ad}_{e^{[\mathcal{S}_1]\theta_1}\cdots e^{[\mathcal{S}_{i-1}]\theta_{i-1}}}(\mathcal{S}_i), \tag{5.11}$$

for $i = 2, \ldots, n$, with the first column $J_{s1} = \mathcal{S}_1$.

$$J_{s4} = \underbrace{\mathrm{Ad}_{e^{[S_1]\theta_1} e^{[S_2]\theta_2} e^{[S_3]\theta_3}}}(S_4)$$

① $\omega_{s1} = [0, 0, 0]^T$

$v_{s1} = [-1, 0, 0]^T$

② $\omega_{s2} = [-1, 0, 0]^T$

$q_2 = [-2, 2, 0]^T$

$v_{s2} = [0, 0, 2]^T$

③ $\omega_{s3} = [0, 0, 0]^T$

$v_{s3} = [0, 1, 0]^T$

now compute: $e^{[S_1]\theta_1} e^{[S_2]\theta_2} e^{[S_3]\theta_3}$

Body Jacobians

Our space Jacobian is $[\mathcal{V}_s] = \dot{T}\,T^{-1}$, and our body Jacobian is $[\mathcal{V}_b] = T^{-1}\dot{T}$

$$T(\theta) = e^{[\mathcal{S}_1]\theta_1} e^{[\mathcal{S}_2]\theta_2} \cdots e^{[\mathcal{S}_n]\theta_n} M = M e^{[\mathcal{B}_1]\theta_1} e^{[\mathcal{B}_2]\theta_2} \cdots e^{[\mathcal{B}_n]\theta_n}$$

$$\dot{T}(\theta) = M[\mathcal{B}_1]\,\dot{\theta}_1 e^{[\mathcal{B}_1]\theta_1} \cdots e^{[\mathcal{B}_n]\theta_n} + \cdots + M e^{[\mathcal{B}_1]\theta_1} \cdots [\mathcal{B}_n]\,\dot{\theta}_n e^{[\mathcal{B}_n]\theta_n}$$

$$T^{-1}(\theta) = e^{-[\mathcal{B}_n]\theta_n} \cdots e^{-[\mathcal{B}_1]\theta_1} M^{-1}$$

$$\begin{aligned}
&T^{-1}\dot{T} \\
&= [\mathcal{B}_n]\dot{\theta}_n + e^{-[\mathcal{B}_n]\theta_n}[\mathcal{B}_{n-1}]e^{[\mathcal{B}_n]\theta_n}\dot{\theta}_{n-1} \\
&+ e^{-[\mathcal{B}_n]\theta_n} e^{-[\mathcal{B}_{n-1}]\theta_{n-1}}[\mathcal{B}_{n-2}]e^{[\mathcal{B}_{n-1}]\theta_{n-1}} e^{[\mathcal{B}_n]\theta_n}\dot{\theta}_{n-1} \\
&+ e^{-[\mathcal{B}_n]\theta_n} \cdots e^{-[\mathcal{B}_2]\theta_2}[\mathcal{B}_1]e^{[\mathcal{B}_2]\theta_2} \cdots e^{[\mathcal{B}_n]\theta_n}\dot{\theta}_1
\end{aligned}$$

The relationship between the Space and Body Jacobian

Recall that:

$$[\mathcal{V}_s] = \dot{T}_{sb}T_{sb}^{-1} \qquad [\mathcal{V}_b] = T_{sb}^{-1}\dot{T}_{sb}$$

$$\mathcal{V}_s = Ad_{T_{sb}}(\mathcal{V}_b) \qquad \mathcal{V}_b = Ad_{T_{bs}}(\mathcal{V}_s)$$

$$\mathcal{V}_s = J_s(\theta)\dot{\theta} \qquad \mathcal{V}_b = J_b(\theta)\dot{\theta}$$

$$Ad_{T_{sb}}(\mathcal{V}_b) = J_s(\theta)\dot{\theta}$$

- Apply $[Ad_{T_{bs}}]$ to both sides and recall that $[Ad_{T_X}][Ad_Y] = [Ad_{XY}]$:

$$Ad_{T_{bs}}(Ad_{T_{sb}}(\mathcal{V}_b)) = \mathcal{V}_b = Ad_{T_{bs}}(J_s(\theta)\dot{\theta})$$

$$J_b(\theta)\dot{\theta} = Ad_{T_{bs}}(J_s(\theta)\dot{\theta})$$

- Since this holds for all $\dot{\theta}$:

$$J_b(\theta) = Ad_{T_{bs}}(J_s(\theta)) = [Ad_{T_{bs}}]J_s(\theta)$$

$$J_s(\theta) = Ad_{T_{sb}}(J_b(\theta)) = [Ad_{T_{sb}}]J_b(\theta)$$

Summary

- Defined **velocity kinematics** as means to compute the twist at the end-effector frame
- Interpreted the end-effector twist as a way to map actuator limits to **possible end-effector velocities** (directions of motion) and insight as to how close a pose is to a **singularity**
- Learned **two methods for computing the Jacobian**: (1) by inspection and (2) by using equations for defining the spatial and body twists
- Now that we can describe the motion of our robot, we'll be moving on to planning, which allows us to tell our robot how to move