Lecture 06:
twists, screws, and wrenches

Prof. Katie Driggs-Campbell

~~[illegible]~~

~~[illegible]~~

Feb 2, 2023

Who is Michael Chasles?

- Rodrigues and Chasles took the entrance exam to Polytechnique/Normale at the same time, finishing first and second respectively
  - Rodrigues did not use it and elected to go to La Sorbonne

Who is Michael Chasles?

- Rodrigues and Chasles took the entrance exam to Polytechnique/Normale at the same time, finishing first and second respectively
  - Rodrigues did not use it and elected to go to La Sorbonne
- The proof that a spatial displacement can be decomposed into a rotation and slide around and along a line is attributed to the astronomer and mathematician Giulio Mozzi (1763),
  - In Italy, the screw axis is traditionally called *asse di Mozzi*
- However, most textbooks refer to a subsequent similar work by Michel Chasles dating 1830
- Several other scholars/contemporaries of M. Chasles obtained the same or similar results around that time, including G. Giorgini, Cauchy, Poinsot, Poisson, and Rodrigues

Mobile arm example

- Robot arm mounted on wheeled platform. Camera fixed to ceiling.
- {b} is body frame, {c} end-effector frame, {e} frame of object, and {a} is fixed frame.
- We assume the camera position and orientation in {a} is given.
- From camera measurements, you can evaluate the position and orientation of the body and the object in the camera frame.
- Since we designed our robot and have joint-angle estimates, we can obtain the end-effector position and orientation in the body frame.
- To pick up the object, we need the object position and orientation in the frame of our end-effector.

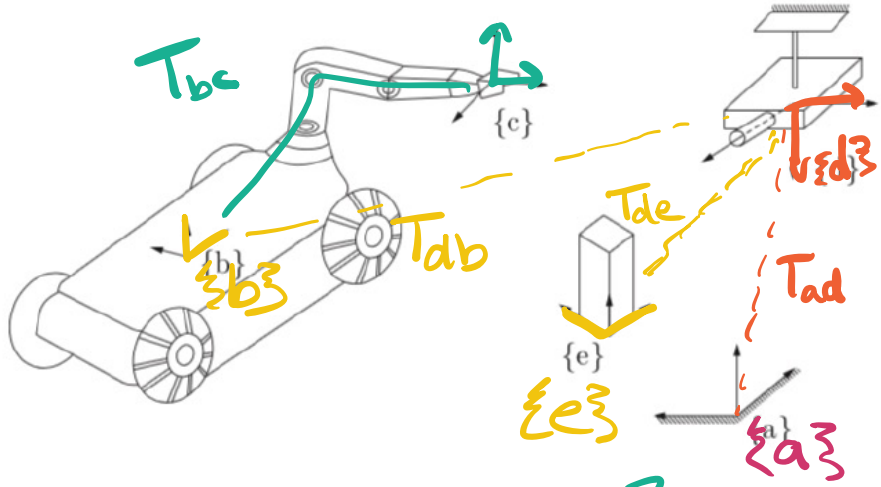

What is Tce?

What is T_{ce}?

$$\overbrace{T_{ab}\,T_{bc}\,T_{ce}}^{T_{ae}} = \overbrace{T_{ad}\,T_{de}}^{T_{ae}}$$

$$\hookrightarrow T_{ab} = T_{a\cancel{d}}\,T_{\cancel{d}b}$$

$$\underbrace{T_{ad}\,T_{db}\,T_{bc}}\,T_{ce} = T_{ad}\,T_{de}$$

$$T_{ce} = (T_{ad}\,T_{db}\,T_{bc})^{-1}\,T_{ad}\,T_{de}$$

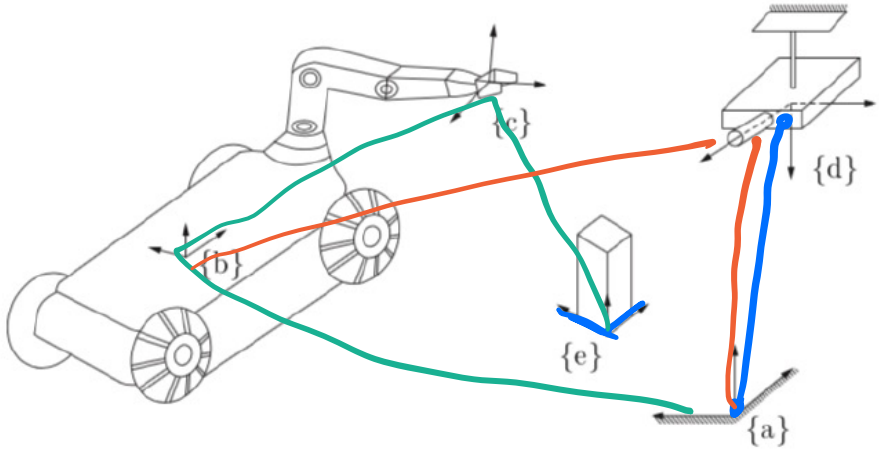

Moving Frames: linear and angular velocity (1)

$$T_{sb}(t) = T(t) = \begin{bmatrix} R(t) & p(t) \\ 0 & 1 \end{bmatrix} \rightsquigarrow \dot{T}(t) = \begin{bmatrix} \dot{R} & \dot{p} \\ 0 & 0 \end{bmatrix}$$

$$\underbrace{T^{-1}\dot{T}} = \begin{bmatrix} R^T & -R^T p \\ 0 & 1 \end{bmatrix} \begin{bmatrix} \dot{R} & \dot{p} \\ 0 & 0 \end{bmatrix} = \begin{bmatrix} R^T\dot{R} & R^T\dot{p} \\ 0 & 0 \end{bmatrix}$$

ang vel in $\{b\}$

lin vel in $\{s\}$

lin vel in $\{b\}$

$$= \begin{bmatrix} [\omega_b] & v_b \\ 0 & 0 \end{bmatrix}$$

ω_b and v_b give us a 6-parameter rep of <u>body twist</u> → spatial velocities in $\{b\}$

$$\mathcal{V}_b = \begin{bmatrix} \omega_b \\ v_b \end{bmatrix}$$

capital, cal V

Moving Frames: linear and angular velocity (2)

$$\mathcal{V}_b = \begin{bmatrix} \overset{3\times1}{\omega_b} \\ \overset{3\times1}{v_b} \end{bmatrix} \Big\} 6\times1$$

bracket notation: $[\mathcal{V}_b] = \begin{bmatrix} \underbrace{\overset{3\times3}{[\omega_b]}}_{\in so(3)} & \overset{3\times1}{v_b} \\ \underset{1\times3}{0} & \underset{1\times1}{0} \end{bmatrix} \in se(3)$

Note: ① brackets generally mean matrix rep

→ $[\mathcal{V}_b]$ and $[\omega_b]$ are different op.

② $[\mathcal{V}_b]$ is not skew-symmetric

Linear and angular velocity in reference frame

$$\dot{T}T^{-1} = \begin{bmatrix} \dot{R} & \dot{p} \\ 0 & 0 \end{bmatrix} \begin{bmatrix} R^T & -R^T p \\ 0 & 1 \end{bmatrix} = \begin{bmatrix} \dot{R}R^T & \underbrace{\dot{p} - \dot{R}R^T p}_{} \\ 0 & 0 \end{bmatrix}$$

linear vel in $\{s\}$

$$= \underbrace{\begin{bmatrix} [\omega_s] & v_s \\ 0 & 0 \end{bmatrix}}_{} \in se(3)$$

spatial twist: spatial vel in $\{s\}$

$$\mathcal{V}_s = \begin{bmatrix} \omega_s \\ v_s \end{bmatrix}, \quad [\mathcal{V}_s]$$

$$v_s = \dot{p} - \overbrace{\dot{R}R^T}^{[\omega_s]} p = \underbrace{\dot{p}}_{} - \underbrace{\omega_s \times p}_{}$$

Physical interpretation of v_s

- Assume that a very large rigid body is attached to the frame {b}, and is large enough to contain the origin of {s}
- What is the velocity of the point of this body as the origin of {s}?
- There are two components:
  - $\dot{p}$: the motion of the body
  - $\omega_s \times (-p)$: the rotation of the body

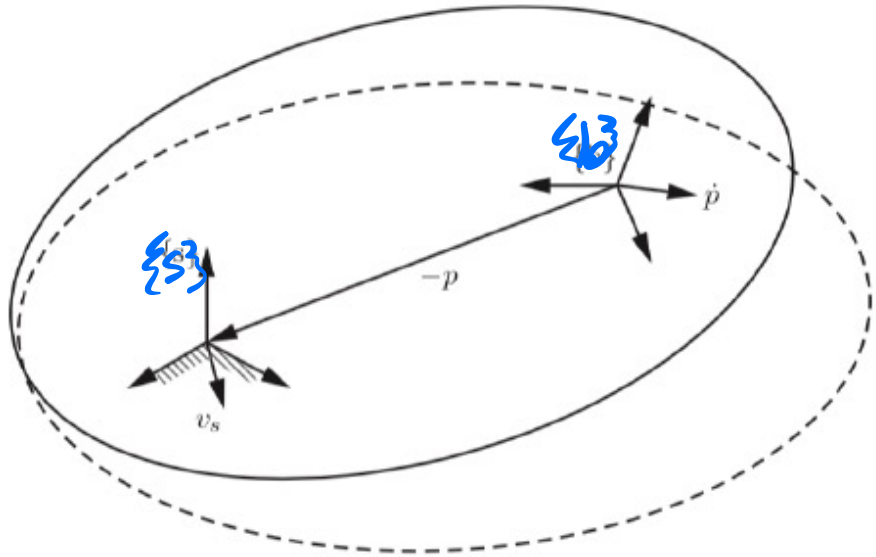

Twists $[\mathcal{V}_b] = T^{-1}\dot{T}$, $[\mathcal{V}_s] = \dot{T}T^{-1}$

recall: $T := T_{sb}$

$$[\mathcal{V}_b] = T^{-1}[\mathcal{V}_s]T, \quad [\mathcal{V}_s] = T[\mathcal{V}_b]T^{-1}$$

$$[\mathcal{V}_s] = \begin{bmatrix} \overbrace{R[\omega_b]R^T}^{[R\omega_b]} & \underbrace{-R[\omega_b]R^T p}_{} + R v_b \\ 0 & 0 \end{bmatrix}$$

a trick: $[\omega]p = \omega \times p = -p \times \omega = -[p]\omega$

$$\begin{bmatrix} \omega_s \\ v_s \end{bmatrix} = \overbrace{\begin{bmatrix} R & 0 \\ [p]R & R \end{bmatrix}}^{[Ad_T]} \begin{bmatrix} \omega_b \\ v_b \end{bmatrix}$$

→ allows us to change frame of ref for twists

→ adjoint map/representation

Adjoint Map associated with T

$$\mathcal{V}' = \overbrace{\underbrace{\begin{bmatrix} R & 0 \\ [p]R & R \end{bmatrix}}_{[Ad_T]} \mathcal{V}}^{Ad_T(\mathcal{V})}$$

By construction, $\mathcal{V}' = Ad_T(\mathcal{V}) \iff [\mathcal{V}'] = T[\mathcal{V}]T^{-1}$

Properties:

① $\underbrace{Ad_{T_1}(Ad_{T_2}(\mathcal{V}))}_{[Ad_{T_1}][Ad_{T_2}]\mathcal{V}} = Ad_{T_1 T_2}(\mathcal{V})$

② $[Ad_{T_1^{-1}}] = [Ad_{T_1}]^{-1}$

Twist Visualization

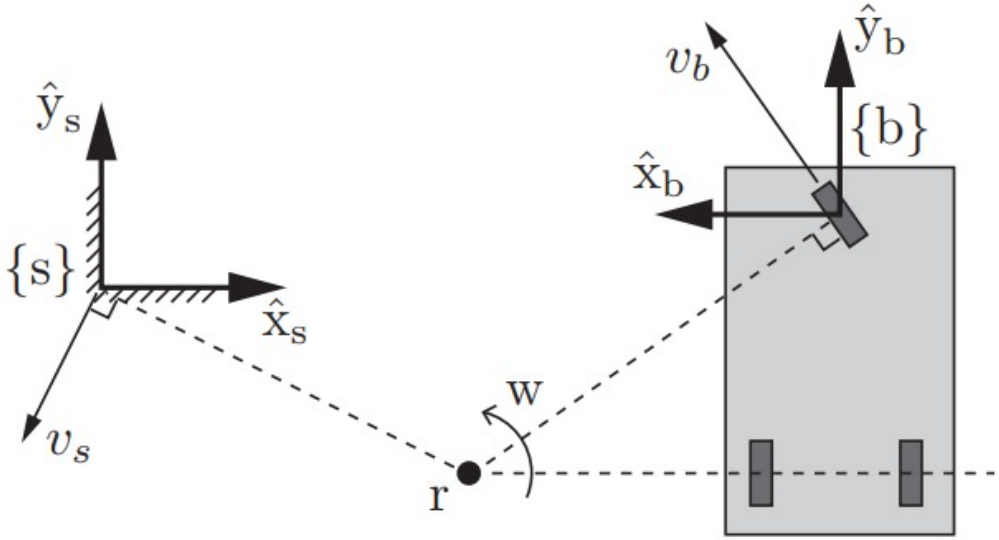

The twist corresponding to the instantaneous motion of the chassis of a three-wheeled vehicle can be visualized as an angular velocity w about the point r.

Screw Motions

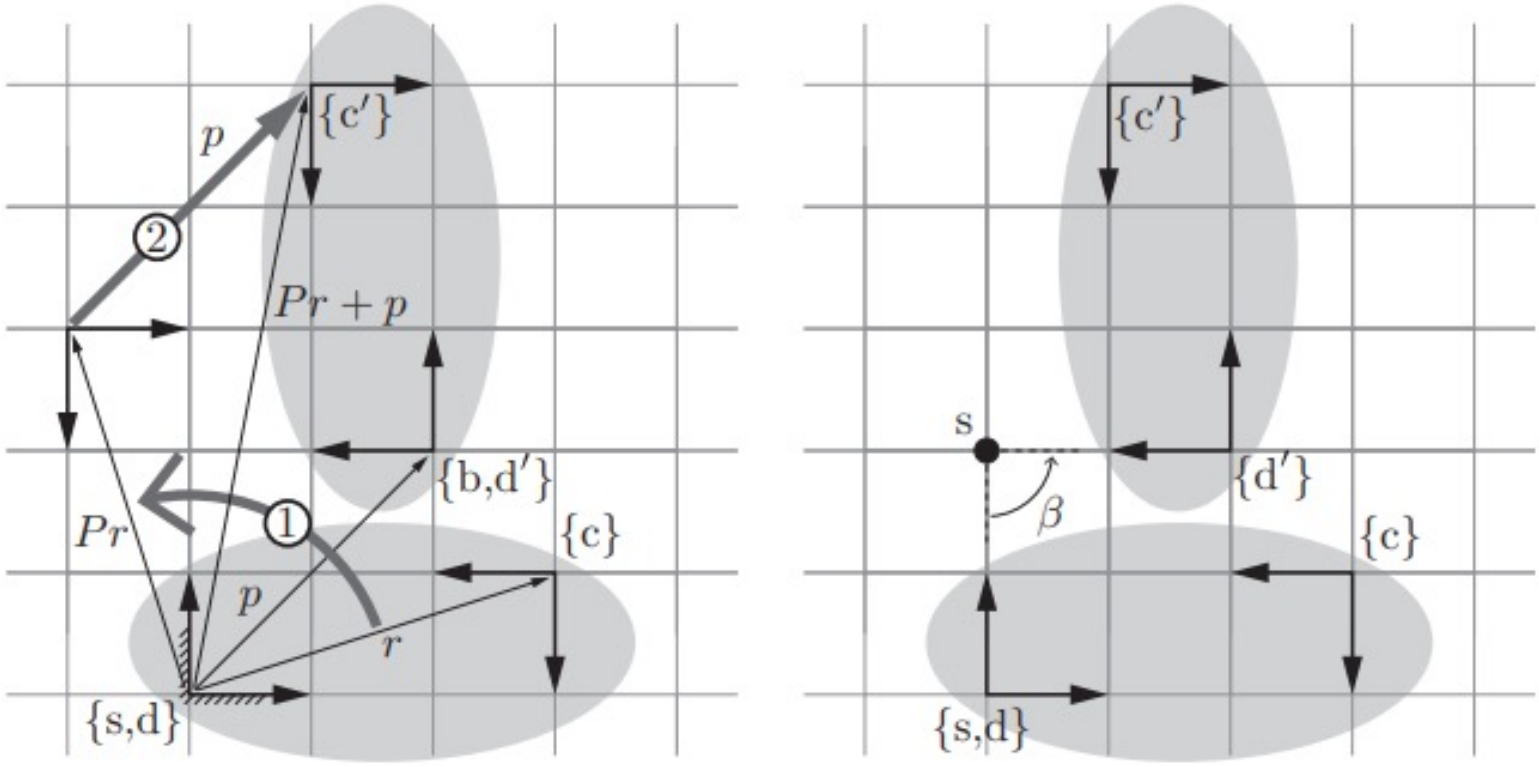

2D Screw Motions

- Any rigid motion in the plane can be represented by a rotation around a well-chosen center
- We can encode it with (β, s_x, s_y), where (s_x, s_y) is the position of the center of the rotation, and β the angle

2D Screw Motions

- Any rigid motion in the plane can be represented by a rotation around a well-chosen center
- We can encode it with (β, s_x, s_y), where (s_x, s_y) is the position of the center of the rotation, and β the angle

- Recall that the angular velocity ω can be viewed as $\widehat{\omega}\dot{\theta}$, where $\widehat{\omega}$ is the unit rotation axis and $\dot{\theta}$ is the rate of rotation
- A twist $\mathcal{V}$ can be interpreted in terms of a screw axis $\mathcal{S}$ and a velocity $\dot{\theta}$ about that axis

Screw motions in 3D

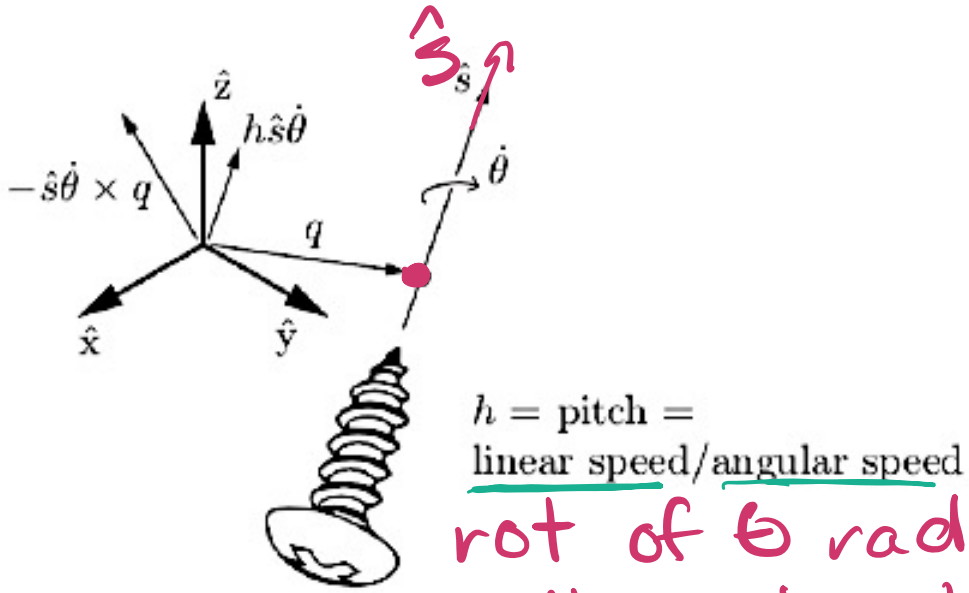

rot of θ rad results in translation of $h\theta$ along axis

Chasles-Mozzi Theorem:
Any displacement in 3D can be represented by a rotation and translation about the same axis, referred to as a screw motion

$q \in \mathbb{R}^3$ is any point along the axis

$\hat{s}$ is a unit vector in the direction of the axis

h is the **screw pitch**, which is the ratio between the linear and angular speed along axis

We write this as $\mathcal{S} = \{q, \hat{s}, h\}$

Screw motions and Twists

screw to twist:

$$\mathcal{V} = \begin{bmatrix} \omega \\ v \end{bmatrix} = \begin{bmatrix} \hat{s}\dot{\theta} \\ \underbrace{h\hat{s}\dot{\theta}}_{\text{trans along screw axis}} - \underbrace{\hat{s}\dot{\theta} \times q}_{\text{linear motion at origin induced by rot of screw axis}} \end{bmatrix}$$

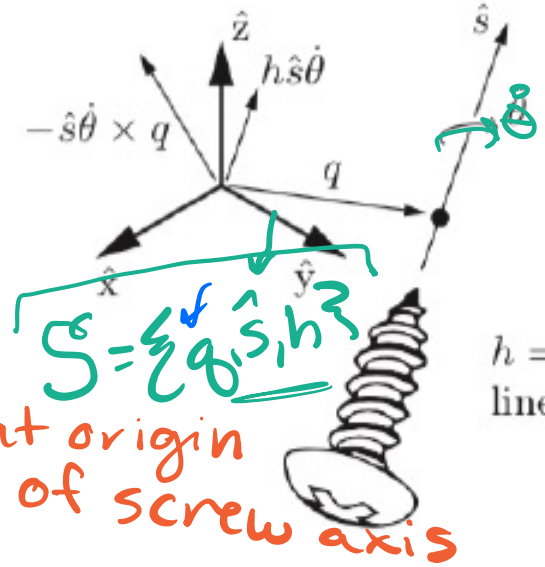

$S = \{q, \hat{s}, h\}$

twist to screw:

$\hat{s} = \omega / \|\omega\| = \hat{\omega}$, $\dot{\theta} = \|\omega\|$, $h = \dfrac{\hat{\omega}^T v}{\dot{\theta}} = \dfrac{\omega^T v}{\|\omega\|^2}$

if $\omega \neq 0$, find q:

$$v = h\hat{s}\dot{\theta} - \hat{s}\dot{\theta} \times q$$

$$q = \hat{s} \times v / \dot{\theta}$$

Screw axis

Given a ref frame, a screw axis $\mathcal{S}$ is def:

$$\mathcal{S} = \begin{bmatrix} \omega \\ v \end{bmatrix} \in \mathbb{R}^6,$$ where either

① $\|\omega\| = 1$

$v = -\omega \times q + \underbrace{h\omega}$

$h=0$ gives pure rotation

or

② $\omega = 0$ and $\|v\| = 1$

$\rightarrow$ translating along v

Note: ω + v are overload

Exponential Coordinates for Rigid Body Motions

Logarithm of rigid body motions

Summary

- Used transformations to define spatial velocities as **body and spatial twists**
- Introduced **screw motions** and the screw interpretation of a twist
- The **screw axis $\boldsymbol{\mathcal{S}}$** was defined and used to define the **exponential coordinates of homogeneous transformations**
- Connections between last lecture and this lecture:
  - Transformation matrix T is analogous to rotation matrix R
  - A screw axis $\mathcal{S}$ is analogous to rotation axis $\widehat{\omega}$
  - A twist $\mathcal{V}$ can be expressed as $\mathcal{S}\dot{\theta}$ and is analogous to angular velocity $\omega = -\widehat{\omega}\dot{\theta}$
  - Exponential coordinates $\mathcal{S}\theta \in \mathbb{R}^6$ for rigid body motions are analogous to exponential coordinates $\widehat{\omega}\theta \in \mathbb{R}^3$