Introduction to Robotics
Lecture 9: Forward Kinematics: PoE in body frame and Denavit-Hartenberg parameters

Product of exponentials: change of frame

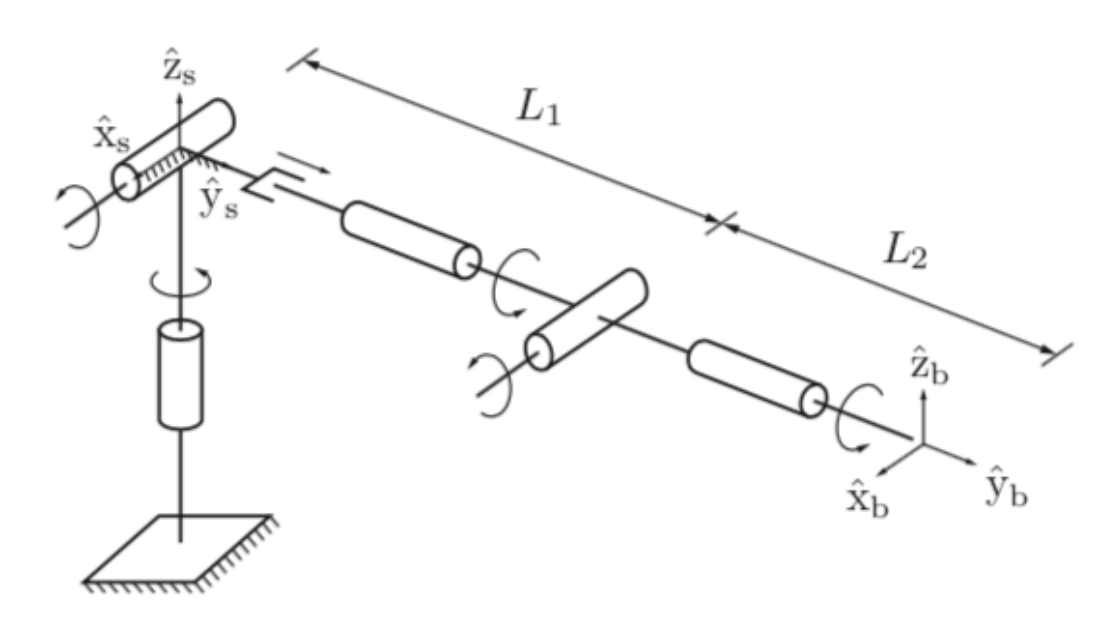

$$M = \begin{bmatrix} 1 & 0 & 0 & 0 \\ 0 & 1 & 0 & L_1 + L_2 \\ 0 & 0 & 1 & 0 \\ 0 & 0 & 0 & 1 \end{bmatrix}$$

i	ω_i	v_i
1	$(0,0,1)$	$(0,0,0)$
2	$(1,0,0)$	$(0,0,0)$
3	$(0,0,0)$	$(0,1,0)$
4	$(0,1,0)$	$(0,0,0)$
5	$(1,0,0)$	$(0,0,-L_1)$
6	$(0,1,0)$	$(0,0,0)$

$\longrightarrow$ we expressed the screw vector of each link with respect to frame s and M is position of end effector in s.

Product of exponentials: change of frame

- Recall the change of frame formula for twists: if $\mathcal{S}_1$ is the twist of link 1 in frame s and $\mathcal{B}_1$ is the twist of link 1 in frame b, then

$$[\mathcal{S}_1] = T_{sb}[\mathcal{B}_1]T_{sb}^{-1} \text{ and } [\mathcal{B}_1] = T_{bs}[\mathcal{S}_1]T_{bs}^{-1}.$$

  or equivalently,

$$\mathcal{S}_1 = \mathrm{Ad}_{T_{sb}}\mathcal{B}_1 \text{ and } \mathcal{B}_1 = \mathrm{Ad}_{T_{bs}}\mathcal{S}_1.$$

- Recall that $M^{-1}e^{A}M = e^{M^{-1}AM}$. Thus

$$e^{A}M = Me^{M^{-1}AM}.$$

Product of exponentials: change of frame

- Recall that in PoE, $M = T_{sb}$ where s is a reference frame and b the end-effector frame. Iterating the previous formula, we get

$$\begin{aligned} T(\theta) &= e^{[\mathcal{S}_1\theta_1]}e^{[\mathcal{S}_2\theta_2]}M \\ &= e^{[\mathcal{S}_1\theta_1]}Me^{M^{-1}[\mathcal{S}_2\theta_2]M} \\ &= Me^{M^{-1}[\mathcal{S}_1\theta_1]M}e^{[\mathcal{B}_2\theta_2]} \\ &= Me^{[\mathcal{B}_1\theta_1]}e^{[\mathcal{B}_2\theta_2]} \end{aligned}$$

- This is the body-form of the PoE
- Note that we can obtain it from the PoE in space form (i.e. with respect to reference frame), or evaluate directly $\mathcal{B}_i$ from the figure.

Product of exponentials: change of frame

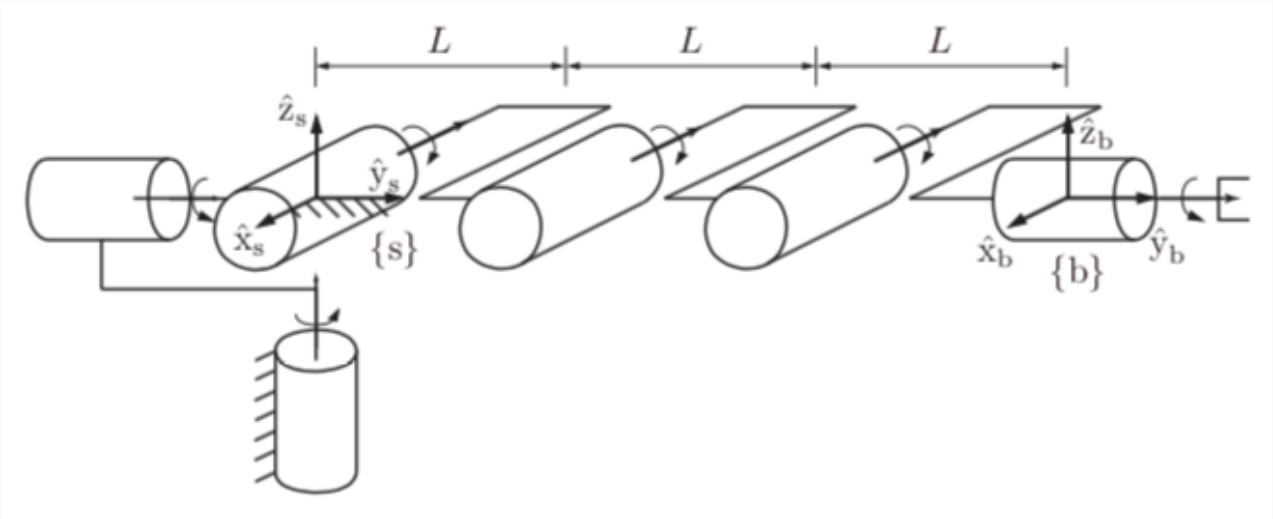

$$M = \begin{bmatrix} 1 & 0 & 0 & 0 \\ 0 & 1 & 0 & 3L \\ 0 & 0 & 1 & 0 \\ 0 & 0 & 0 & 1 \end{bmatrix}$$

i	ω_i	v_i
1	$(0,0,1)$	$(0,0,0)$
2	$(0,1,0)$	$(0,0,0)$
3	$(-1,0,0)$	$(0,0,0)$
4	$(-1,0,0)$	$(0,0,L)$
5	$(-1,0,0)$	$(0,0,2L)$
6	$(0,1,0)$	$(0,0,0)$

space-frame

i	ω_i	v_i
1	$(0,0,1)$	$(-3L,0,0)$
2	$(0,1,0)$	$(0,0,0)$
3	$(-1,0,0)$	$(0,0,-3L)$
4	$(-1,0,0)$	$(0,0,-2L)$
5	$(-1,0,0)$	$(0,0,-L)$
6	$(0,1,0)$	$(0,0,0)$

body-frame

Denavit-Hartenberg formalism

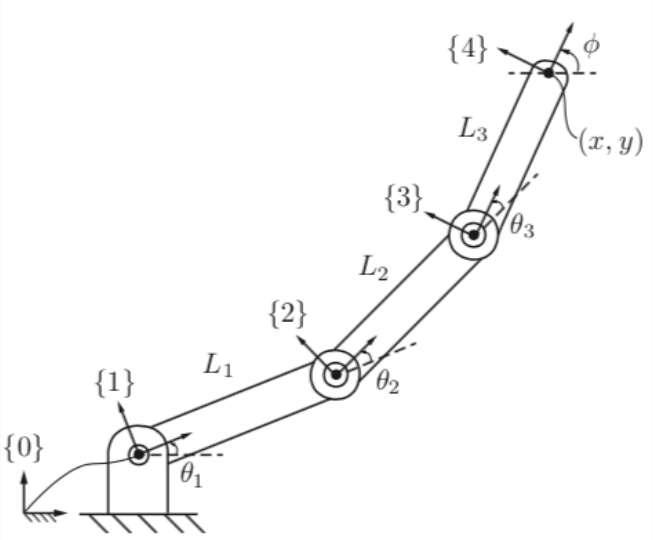

- Recall the 3R arm. We have $T_{04} = T_{01}\,T_{12}\,T_{23}\,T_{34}$.
- The DH formalism provides a set of rules for assigning frames to links.
- This formalism makes velocity kinematics easier, and standardizes the way to write forward kinematics.
- We will mostly use the PoE formalism in this course, but DH being widely used, we go over the procedure.

DH rules

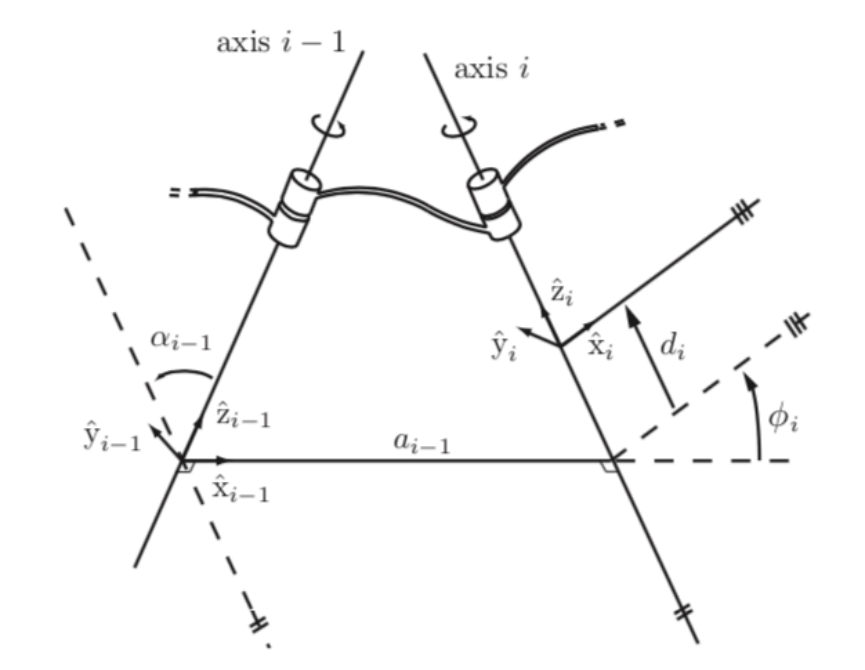

- For all links $\hat{z}_i$ is aligned with joint axis i (i.e. with $\hat{s}_i$ of the corresponding screw)
- Assume that $\hat{z}_i$ and $\hat{z}_{i-1}$ do not intersect and are not parallel. Let

$$a_{i-1} = \text{ segment intersecting } \hat{z}_{i-1} \& \hat{z}_i, \text{ perpendicular to both.}$$

- Origin of frame $i-1$ = intersection of a_{i-1} and axis of $\hat{z}_{i-1}$

DH rules

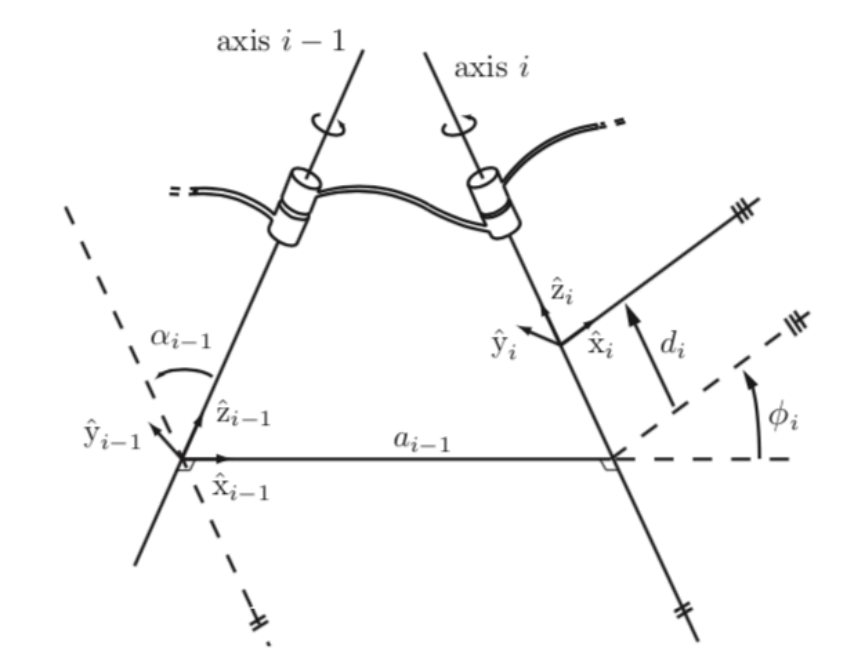

- Axis $\hat{x}_{i-1}$ is aligned with a_{i-1}.
- Axis $\hat{y}_{i-1}$ is obtained using right-hand-rule.

$$\longrightarrow \text{ frame } i-1 \text{ is specified}$$

- To assign T_i, we repeat the above with knowledge from joint $i+1$.

DH rules

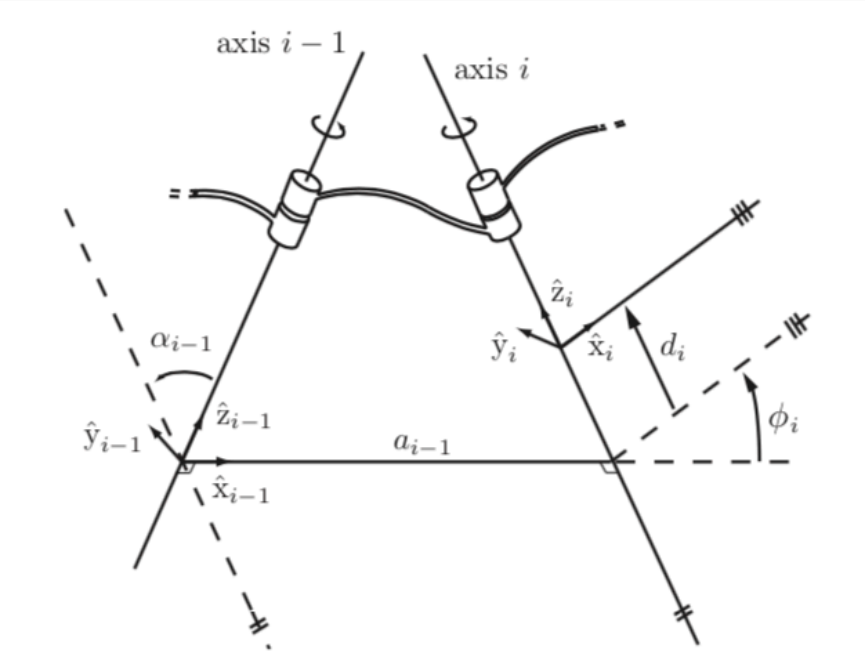

- Assume frames $i-1$ and i have been specified. We need 4 parameters to obtain $T_{(i-1)i}$.
  1. The length of a_{i-1}, called **link length**. (not length of physical link in general)
  2. Angle α_{i-1} between $\hat{z}_{i-1}$ and $\hat{z}_i$ around $\hat{x}_{i-1}$, called **link twist**.
  3. The distance d_i between intersection of a_{i-1} and $\hat{z}_i$ and origin of frame i. This is called the **link offset**.
  4. The angle ϕ_i between $\hat{x}_{i-1}$ and $\hat{x}_i$ measured about the $\hat{z}_i$ axis. This is called the **joint angle**

DH rules

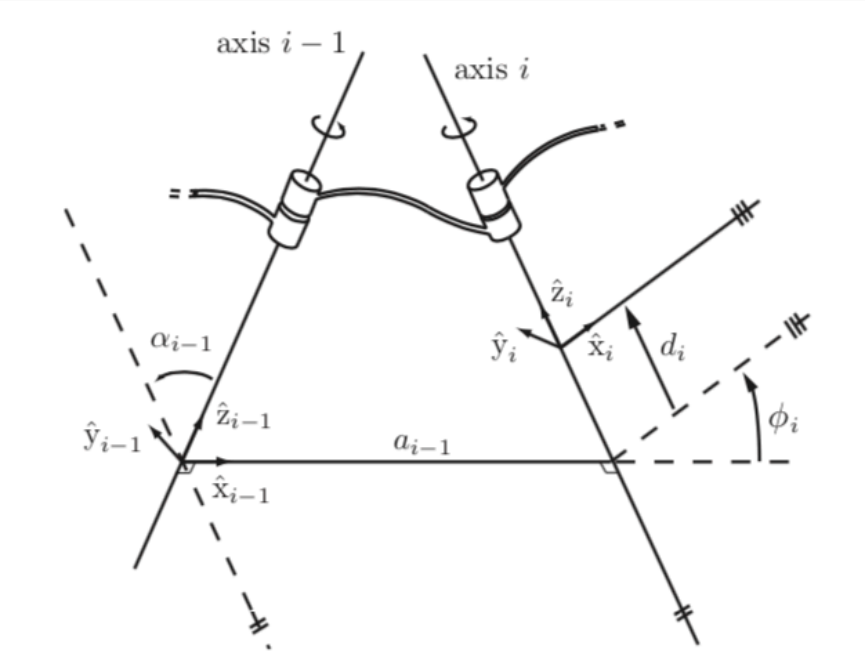

- Recall that $T_{si} = T_{s(i-1)}T_{(i-1)i}$. We have

$$T_{(i-1)i} = Rot(\hat{x}, \alpha_{i-1})Tr(\hat{x}, a_{i-1})Tr(\hat{z}, d_i)Rot(\hat{z}, \phi_i)$$

$$= \begin{bmatrix} \cos\phi_i & -\sin\phi_i & 0 & a_{i-1} \\ \sin\phi_i\cos\alpha_{i-1} & \cos\phi_i\cos\alpha_{i-1} & -\sin\alpha_{i-1} & -d_i\sin\alpha_{i-1} \\ \sin\phi_i\sin\alpha_{i-1} & \cos\phi_i\sin\alpha_{i-1} & \cos\alpha_{i-1} & d_i\cos\alpha_{i-1} \\ 0 & 0 & 0 & 1 \end{bmatrix}$$

DH rules

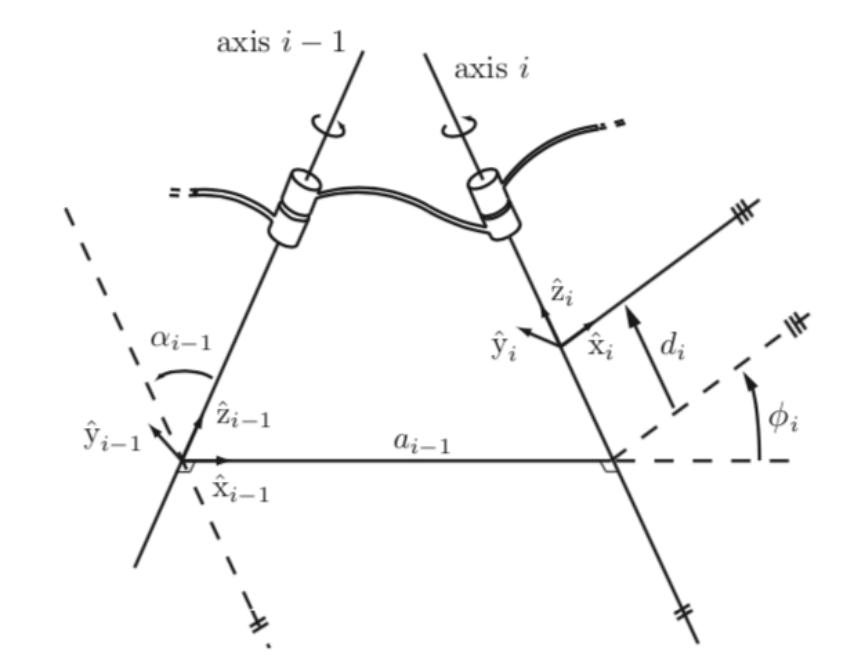

- We can visualize $T_{i-1,i}$ as the following sequence of steps:
  1. Rotation of frame $i-1$ about its $\hat{x}$ axis by angle α_{i-1}
  2. Translation of resulting frame along its $\hat{x}$ axis by distance a_{i-1}.
  3. Translation of resulting frame along its $\hat{z}$ axis by distance d_i
  4. Rotation of the new frame about its $\hat{z}$ axis by angle ϕ_i.

DH special cases: intersecting and parallel revolution axes

Intersecting axes

- If the two axes of revolution intersect, then $a_{i-1} = 0$.
- In this case, set $\hat{x}_{i-1}$ to be perpendicular to both $\hat{z}_i$ and $\hat{z}_{i-1}$.
- Two such $\hat{x}_{i-1}$ exist, both are fine (they lead to opposite signs for the angle α_{i-1})

Parallel axes

- If the two axes are parallel, there is an infinite number of choices for the segment a_{i-1}, all of the same length and perpendicular to be $\hat{z}_i$ and $\hat{z}_{i-1}$.
- We can choose any of these.
- In practice, choose it so as to make other parameters zero or easy to manipulate, but it is not necessary to do so.

DH: prismatic joints

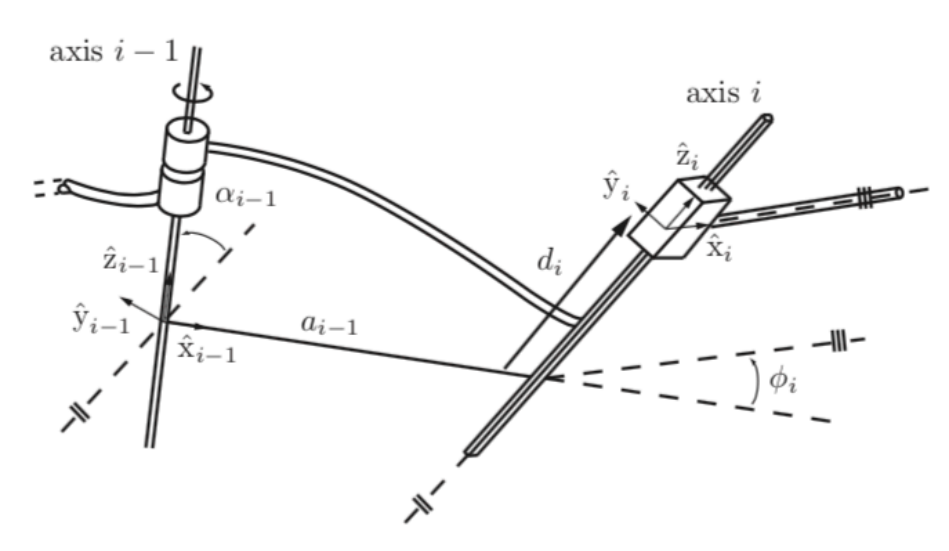

- Choose the $\hat{z}$ direction of the link reference frame to be along *positive* direction of translation.
- Link offset d_i is the joint variable and joint angle ϕ_i is constant (opposite situation of revolute joint)
- All else (convention to choose frame origin, choice of $\hat{x}$ and $\hat{y}$ axes) remains the same as for revolute joints.

DH: 3R open chain

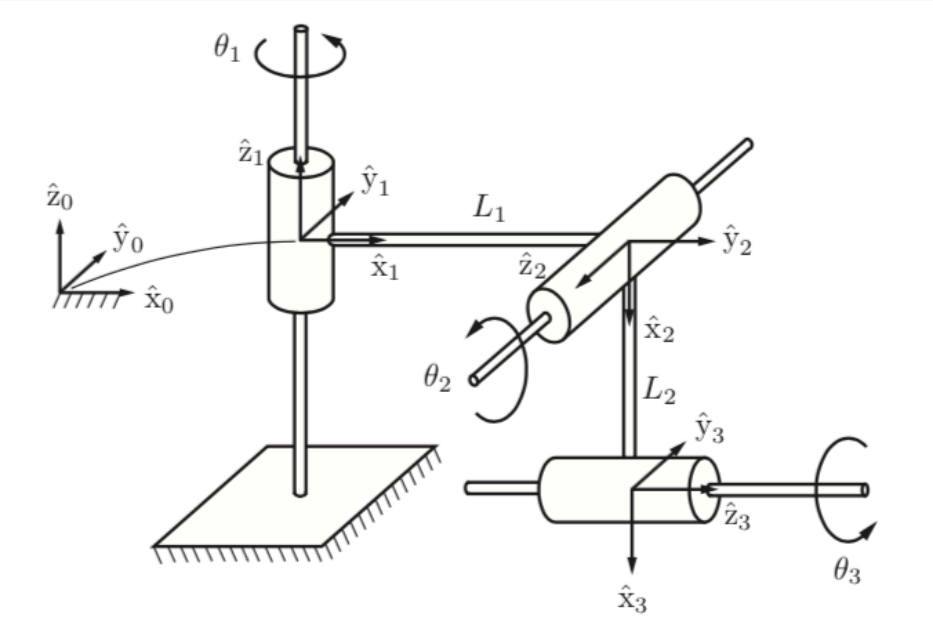

1. length of a_{i-1}=link length
2. α_{i-1}= $\measuredangle$ b/t $\hat{z}_{i-1}$ and $\hat{z}_i$ around $\hat{x}_{i-1}$ = link twist.
3. d_i= dist. b/t $a_{i-1} \cap \hat{z}_i$ and orig. frame i= link offset.
4. ϕ_i=$\measuredangle$ b/t $\hat{x}_{i-1}$ and $\hat{x}_i$ around $\hat{z}_i$=joint angle

- Frames 1 and 2 are uniquely specified.
- Choose frame 3 so that $\hat{x}_3 = \hat{x}_2$.

i	α_{i-1}	a_{i-1}	d_i	ϕ_i
1	0	0	0	θ_1
2	$90°$	L_1	0	$\theta_2 - 90°$
3	$-90°$	L_2	0	θ_3

DH: RRRP open chain

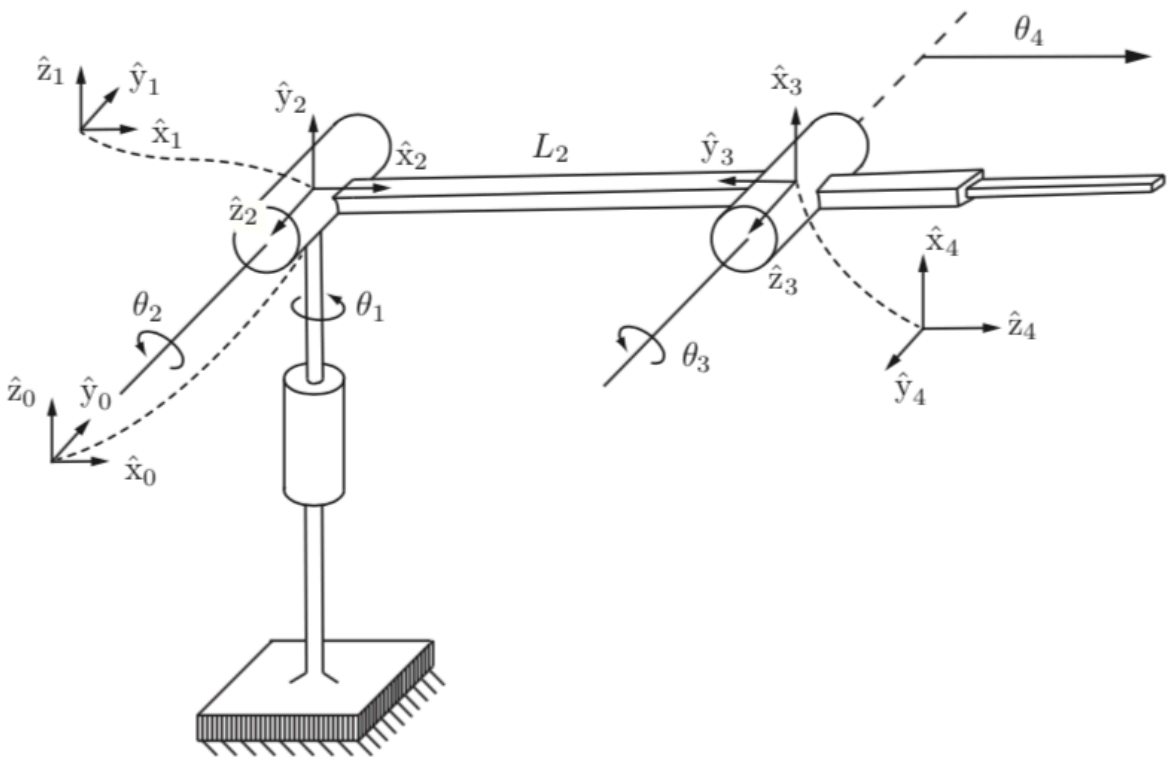

i	α_{i-1}	a_{i-1}	d_i	ϕ_i
1	0	0	0	θ_1
2	90°	0	0	θ_2
3	0	L_2	0	$\theta_3 + 90°$
4	90°	0	θ_4	0

- θ_4 is displacement of prismatic joint.
- Choose frame 3 so that $\hat{x}_3 = \hat{x}_2$.

From DH matrix to PoE

- We can easily translate a DH representation into a PoE.
- To do so, first recall that for an invertible matrix M, $Me^{P}M^{-1} = e^{MPM^{-1}}$, and thus

$$Me^{P} = e^{MPM^{-1}}M.$$

- Recall that

$$T_{(i-1)i} = Rot(\hat{x}, \alpha_{i-1})Tr(\hat{x}, a_{i-1})Tr(\hat{z}, d_i)Rot(\hat{z}, \phi_i).$$

- If joint is revolute: set $\theta_i = \phi_i$ and write $Rot(\hat{z}, \theta_i)$ as the matrix exponential

$$Rot(\hat{z}, \theta_i) = e^{[\mathcal{A}_i]\theta_i}, [\mathcal{A}_i] = \begin{bmatrix} 0 & -1 & 0 & 0 \\ 1 & 0 & 0 & 0 \\ 0 & 0 & 0 & 0 \\ 0 & 0 & 0 & 0 \end{bmatrix}.$$

We have $T_{i-1,i} = M_i e^{[\mathcal{A}_i]\theta_i}$ with $M_i = Rot(\hat{x}, \alpha_{i-1})Tr(\hat{x}, a_{i-1})Tr(\hat{z}, d_i)$.

From DH matrix to PoE

- If joint is prismatic: set $\theta_i = d_i$ and write $Tr(\hat{z}, d_i)$ as the matrix exponential

$$Tr(\hat{z}, \theta_i) = e^{[\mathcal{A}_i]\theta_i}, [\mathcal{A}_i] = \begin{bmatrix} 0 & 0 & 0 & 0 \\ 0 & 0 & 0 & 0 \\ 0 & 0 & 0 & 1 \\ 0 & 0 & 0 & 0 \end{bmatrix}$$

  We have $T_{i-1,i} = M_i e^{[\mathcal{A}_i]\theta_i}$ with $M_i = Rot(\hat{x}, \alpha_{i-1}) Tr(\hat{x}, a_{i-1}) Rot(\hat{z}, \phi_i)$. (Note that the last two operations in $T_{i-1,i}$ commute here!)

From DH matrix to PoE

- Putting the above together, we have

$$T_{0,n} = M_1 e^{[\mathcal{A}_1]\theta_1} M_2 e^{[\mathcal{A}_2]\theta_2} \cdots M_n e^{[\mathcal{A}_n]\theta_n}$$

- Using the identity $Me^P = e^{MPM^{-1}} M$ iteratively, we obtain

$$\begin{aligned} T_{0n} &= e^{M_1[\mathcal{A}_i]M_1^{-1}\theta_1}(M_1 M_2)e^{[\mathcal{A}_2]\theta_2} \cdots e^{[\mathcal{A}_n]\theta_n} \\ &= e^{M_1[\mathcal{A}_i]M_1^{-1}\theta_1} e^{(M_1 M_2)[\mathcal{A}_2](M_1 M_2)^{-1}\theta_2}(M_1 M_2 M_3) \cdots e^{[\mathcal{A}_n]\theta_n} \\ &= e^{[\mathcal{S}_1]\theta_1} \cdots e^{[\mathcal{S}_n]\theta_n} M \end{aligned}$$

with

$$\begin{aligned} [\mathcal{S}_i] &= (M_1 \cdots M_{i-1})[\mathcal{A}_i](M_1 \cdots M_{i-1})^{-1} \\ M &= M_1 M_2 \cdots M_n \end{aligned}$$