Recall:

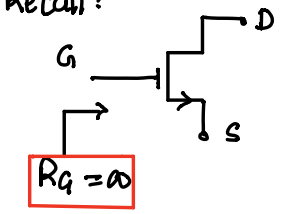

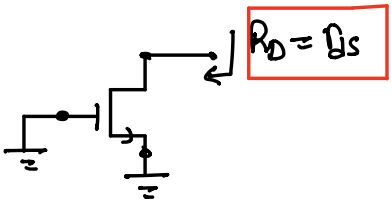

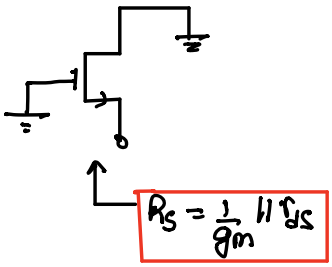

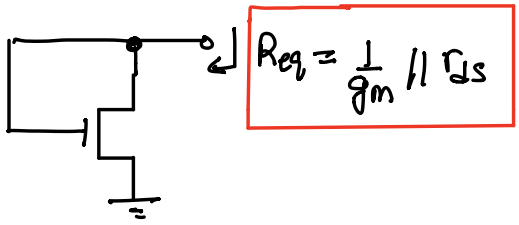

① 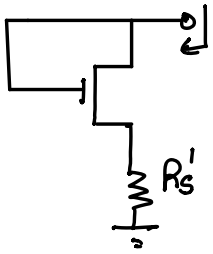

$$R_{eq} = \left(\frac{1}{g_m} \| r_{ds}\right) + R_S' \approx 1/g_m \| R_S'$$

$g_m r_{ds} \gg 1$

② 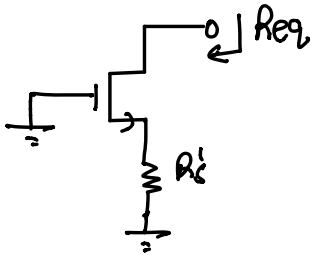

Note: $R_{eq} \neq R_S' + 1/g_m$ ✗

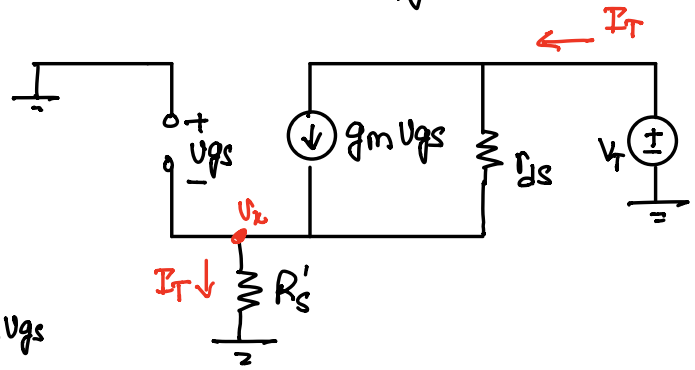

$$V_x = -V_{gs} = I_T R_S'$$

$$I_T = \frac{V_T - V_x}{r_{ds}} + g_m V_{gs}$$

$$= \frac{V_T - V_x}{r_{ds}} - g_m I_T R_S'$$

$$\Rightarrow \quad \frac{V_T}{I_T} = R_S' + r_{ds} + g_m r_{ds} R_S$$

$$\Rightarrow \boxed{R_{eq} = R_S' + r_{ds}(1 + g_m R_S')}$$

Impedance gets scaled

(3)

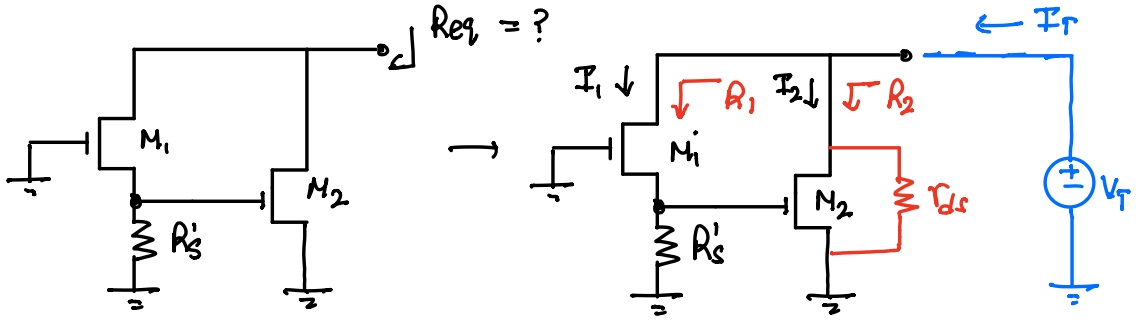

Note here : $R_1 = R_S' + r_{ds_1} + g_{m_1} R_S' r_{ds}$

BUT

$R_2 \neq r_{ds2}$ WHY ?

Consider, $I_T = I_1 + I_2$

$= \frac{V_T}{R_1} + g_{m2} v_{gs_2} + \frac{V_T}{r_{ds_2}}$

$I_T = \frac{V_T}{R_1} + g_{m2} \frac{V_T}{R_1} R_S' + \frac{V_T}{r_{ds_2}}$

$\Rightarrow$ $\boxed{R_{eq} = \frac{V_T}{I_T} = \frac{1}{\frac{1}{R_1} + g_{m2} \frac{R_S'}{R_1} + \frac{1}{r_{ds_2}}}}$